D Torbodenverriegelung
F Verrouilleur Sol
GB Mechanical Door Latch

Modell
Modèle
Model

MDL100LM

D Ersatzteile
F Pièces de rechange
GB Replacement parts

EC - Producer's - Declaration of Conformity

We, CWI electrotechnics GmbH
Alfred-Nobel-Strasse 4 D66793 Saarwellingen

declare, that the following machinery complies with all the essential health and safety requirements of the Directive.

Description of machinery: Door Latch — Type of machinery: **MDL100LM**

EU Directives: EC Directive for low voltage 73/23/ECC
EC Directive electromagnetic compatibility 89/336/ECC with amendments

Applicable harmonized standards: EN 55011, EN 55014, EN 60555-2/-3

Saarwellingen, 15. February 1998

Chefingenieur Colin B. Willmott

Installation

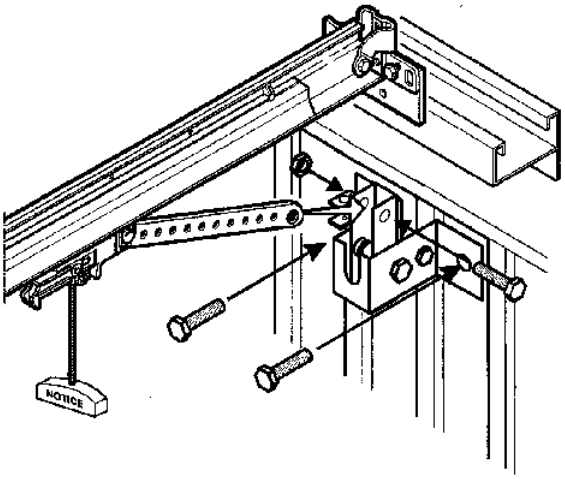

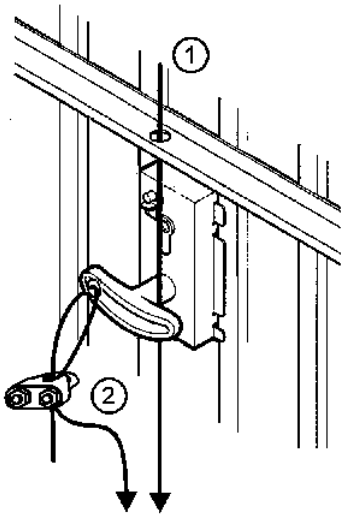

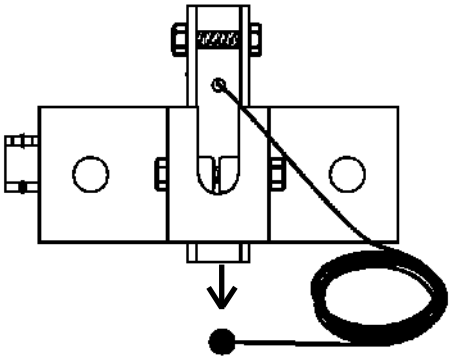

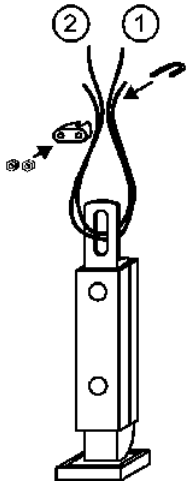

Lift-Master™

Alfred-Nobel-Str. 4
66793 Saarwellingen
Tel.: 06838/907-172
Fax.: 06838/907-179

709051B