LiftMaster

LM50EV

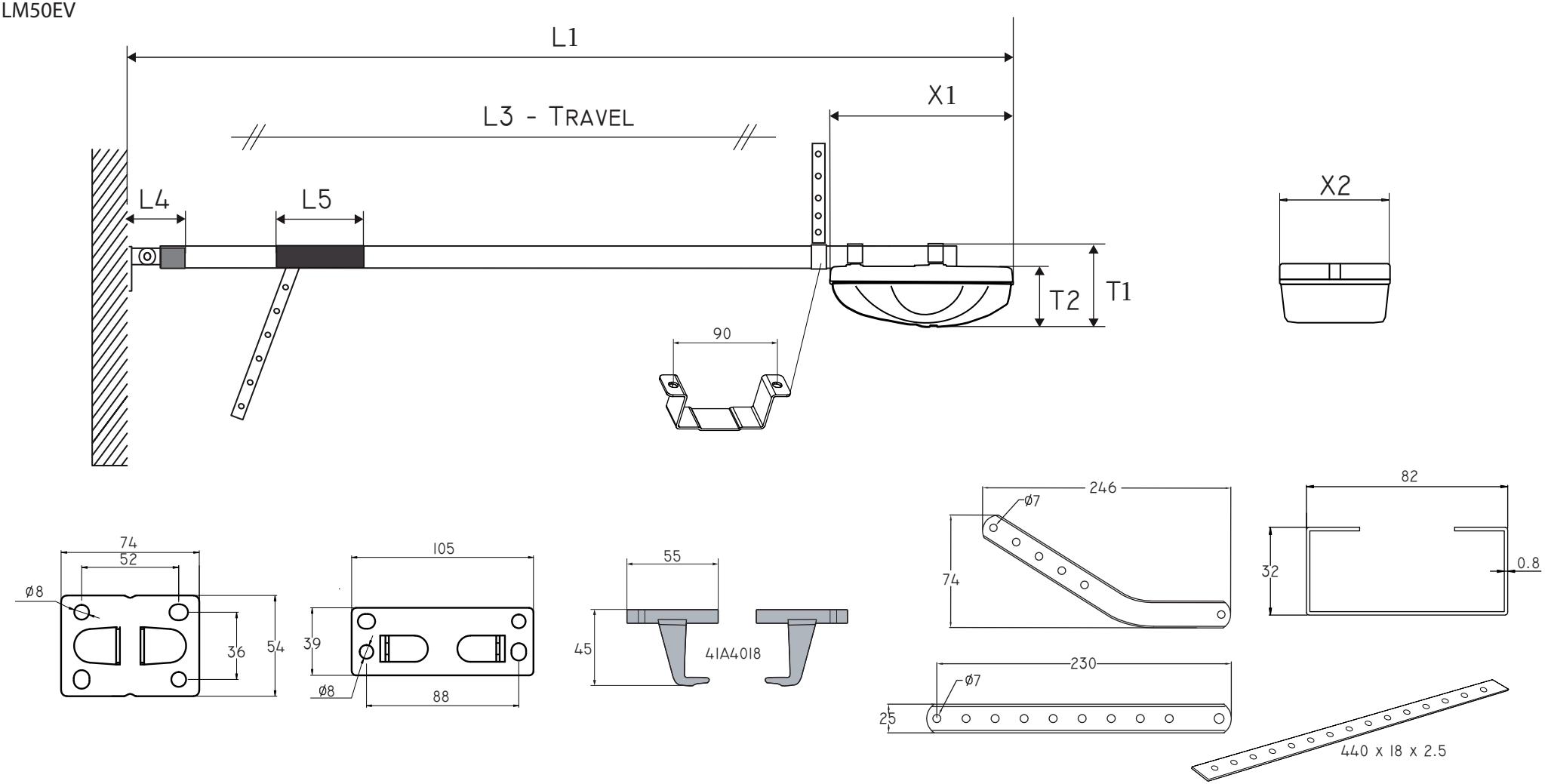

Model	Short Description		Rail (mm)	L1 (mm)	L3 (mm)	L4 (mm)	L5 (mm)	X1 (mm)	X2 (mm)	T1 (mm)	T2 (mm)	Chain length (mm)
	3-piece rail for 2.3m door height with product sold only	**Chain**	2993	3135	2505	180	150	310	170	145	110	5677
708CR4	Extension to 2.6m (Asia only)	**Chain**	400	3535	2905							800
710CR4	Extension to 3.0m	**Chain**	748	3883	3253							1503