Entry

INS-30219

Paxton

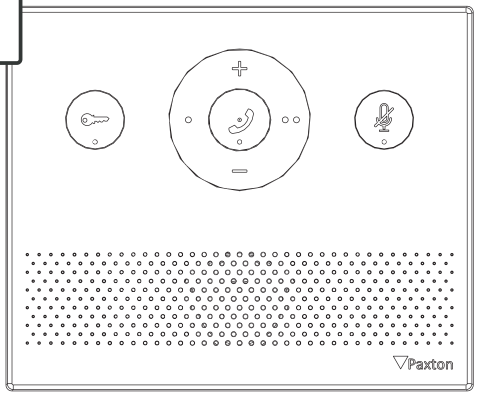

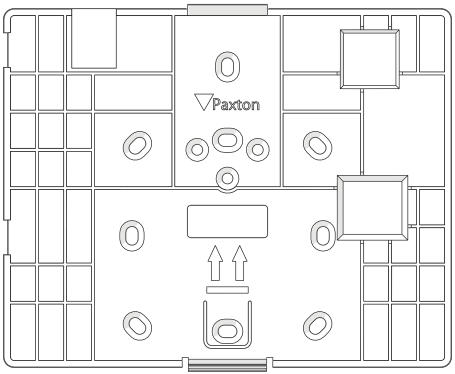

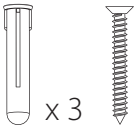

x 3 x 3 337-270

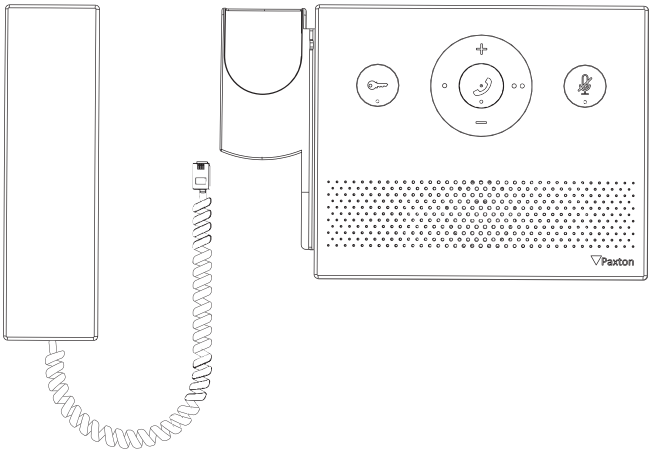

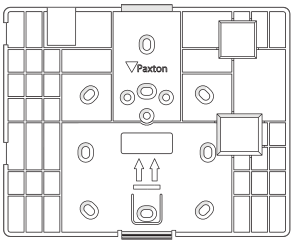

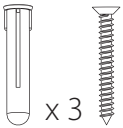

x 3 x 3 337-272

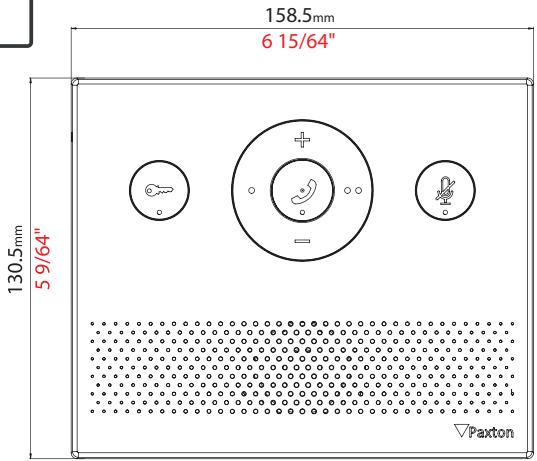
158.5mm
6 15/64"
130.5mm
5 9/64"
Paxton

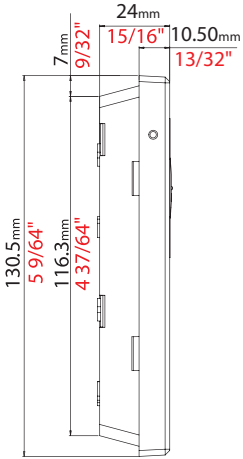
24mm
15/16"
10.50mm
13/32"
7mm
9/32"
130.5mm
5 9/64"
116.3mm
4 37/64"

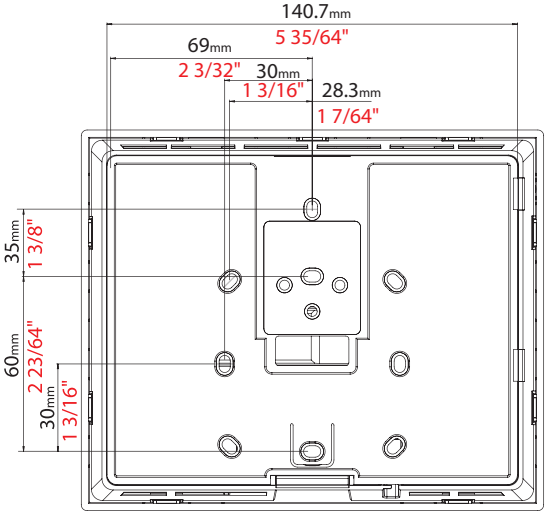
140.7mm
5 35/64"
69mm
2 3/32"
30mm
1 3/16"
28.3mm
1 7/64"
35mm
1 3/8"
60mm
2 23/64"
30mm
1 3/16"

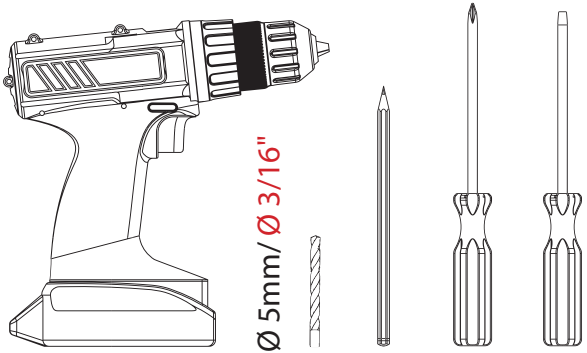

1

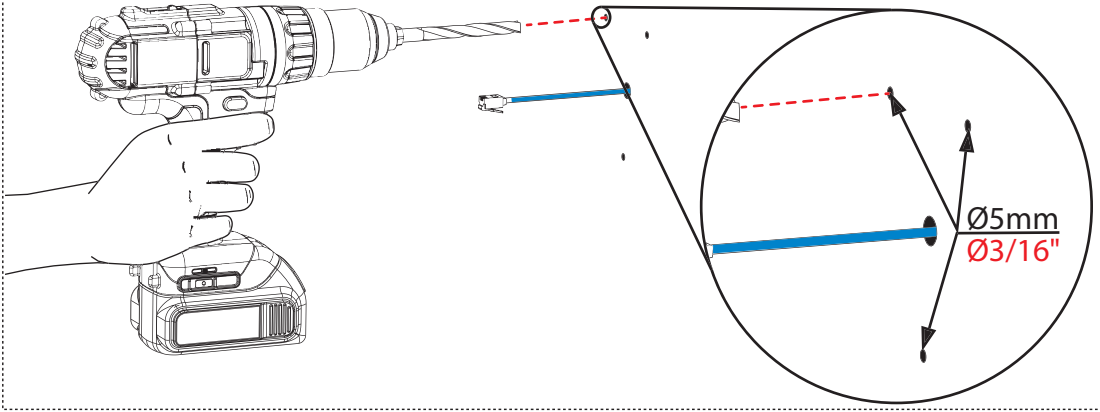

2

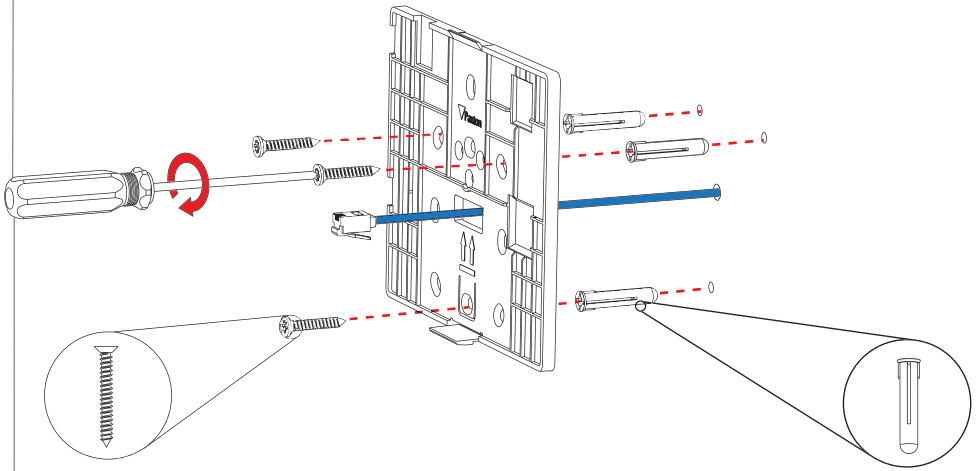

3

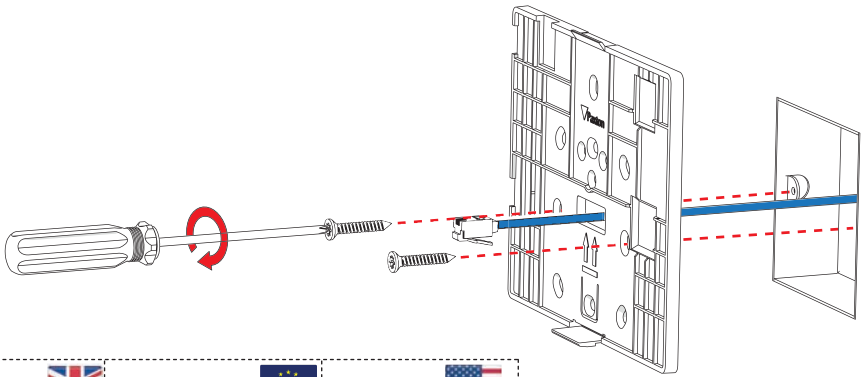

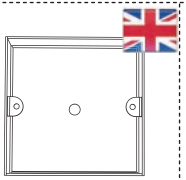

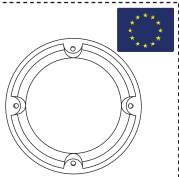

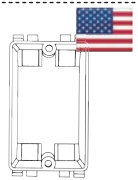

4

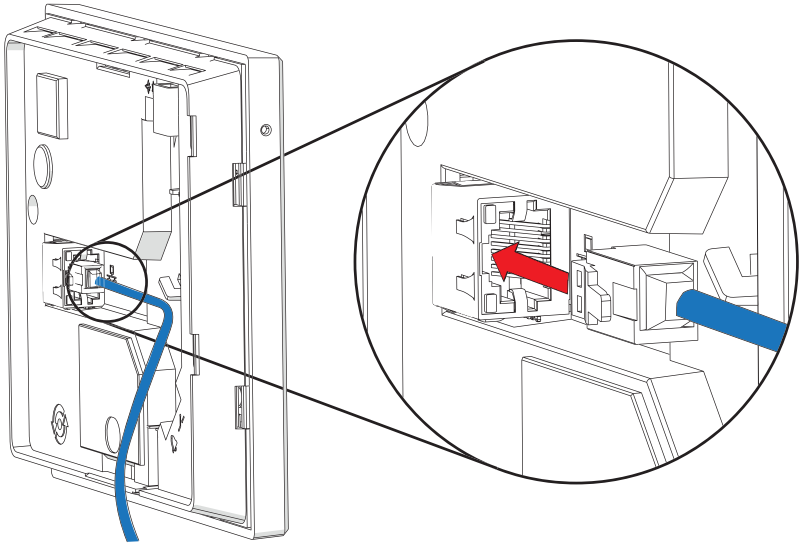

5

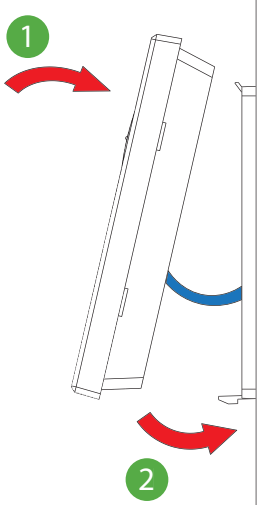

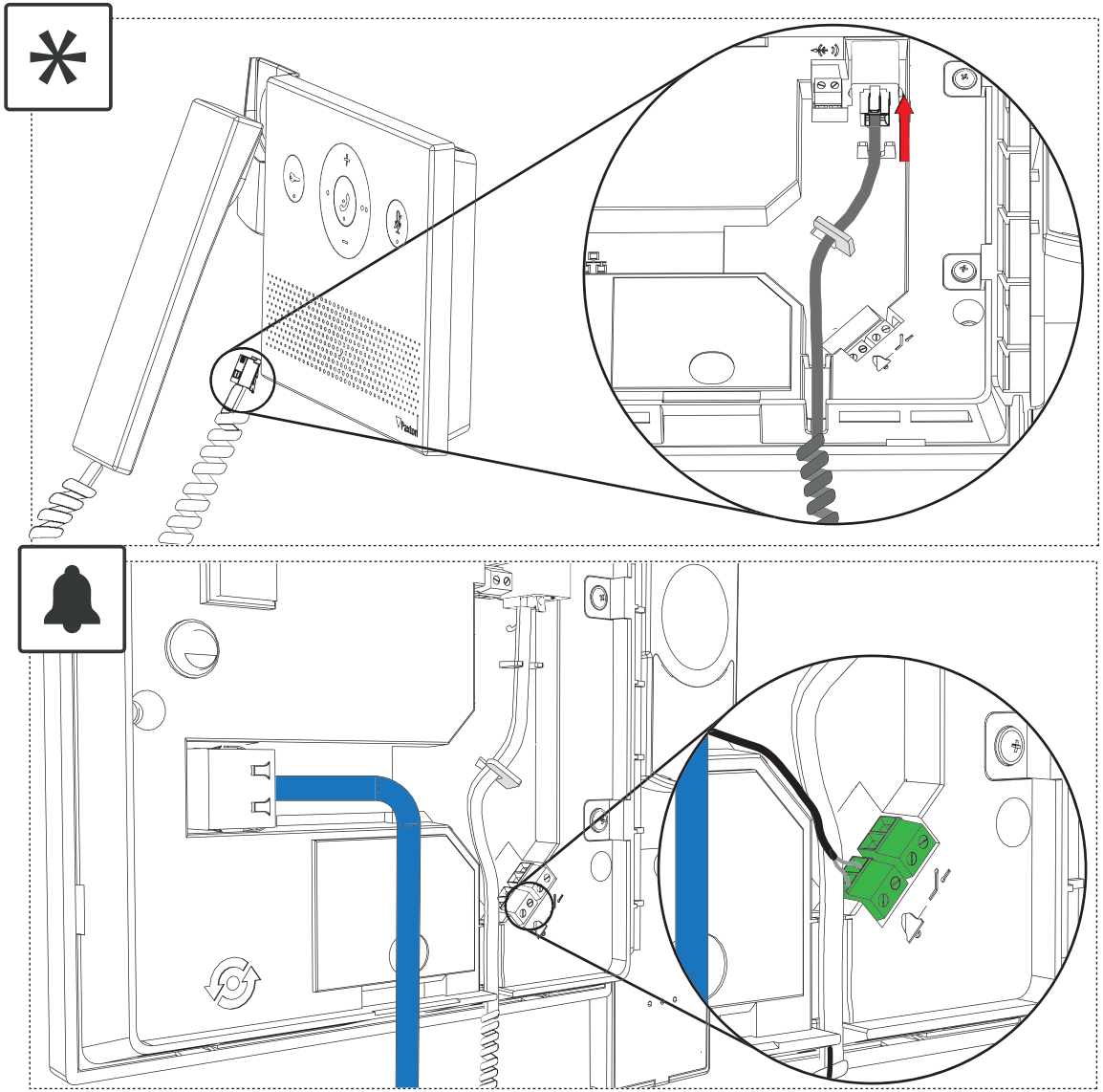

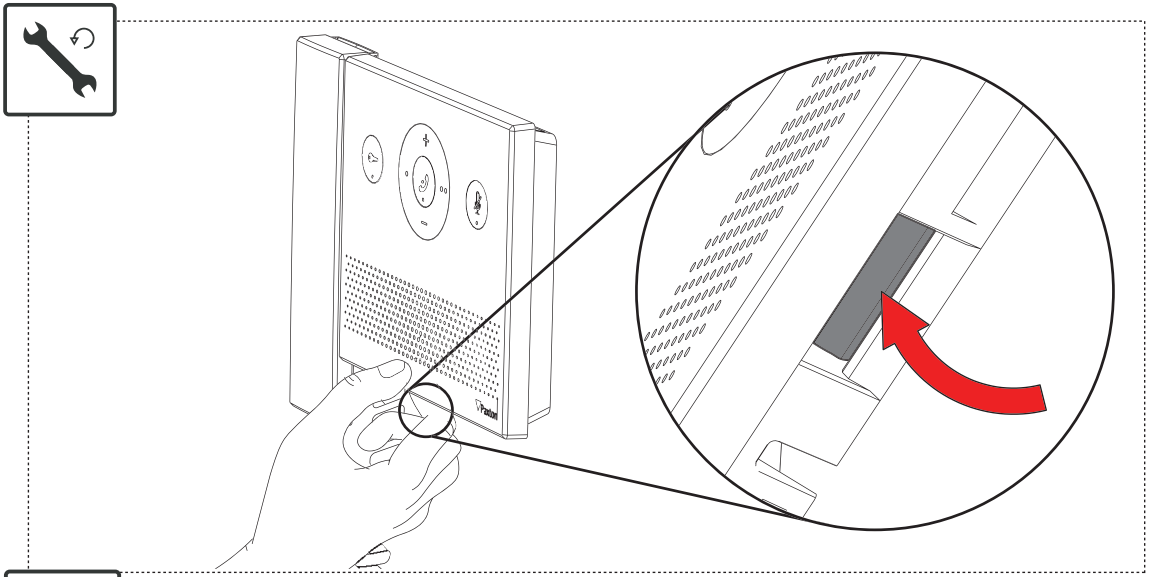

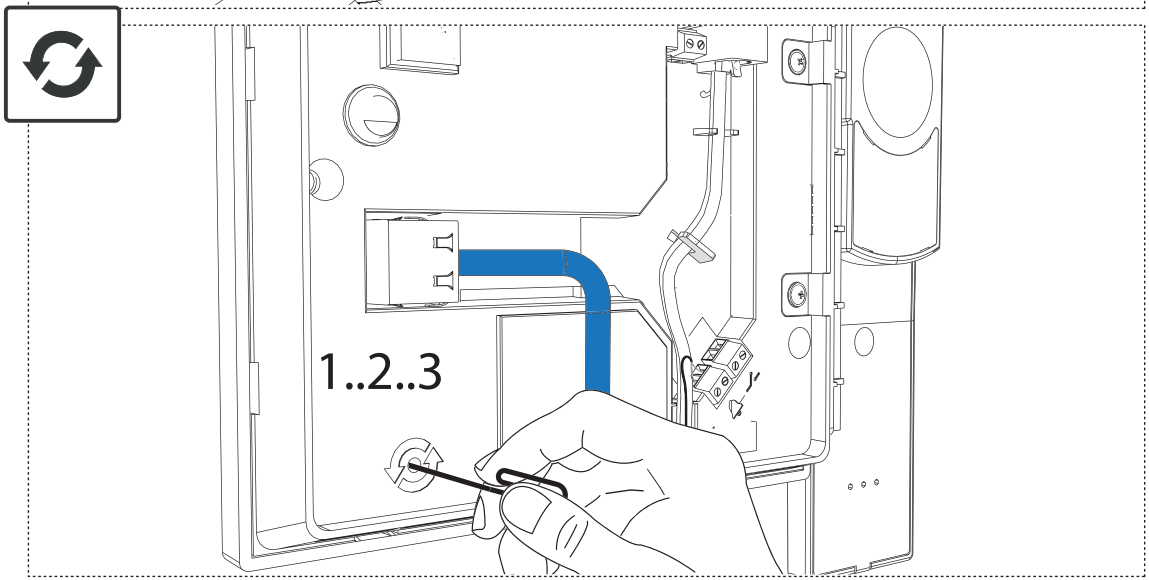
1..2..3

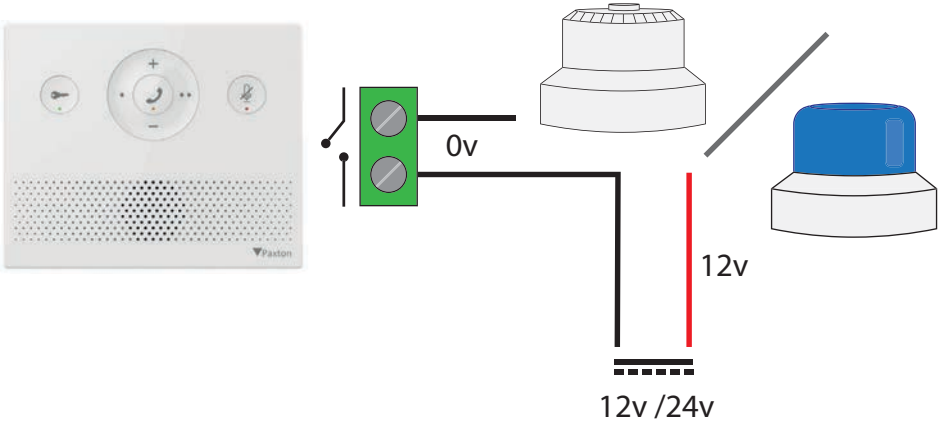
0v
12v
12v /24v

	GB	NL	F	D
	Unlock door	Open deur	Déverrouiller porte	Tür öffnen
	Answer	Opnemen	Répondre	Antwort
	Volume	Volume	Volume	Lautstärke
	Mute/DND	Mute/DND	Silence/Ne pas Déranger	Stumm/Bitte nicht stören
	Aux 1	Aux 1	Aux 1	Aux 1
	Aux 2	Aux 2	Aux 2	Aux 2
	Ethernet	Ethernet	Ethernet	Ethernet
	Door Bell	Deurbel	Sonnette porte	Türglocke
	Reset	Reset	Réinitialiser	Reset
	Line out	Line out	Sortie ligne	Line out
	Relay	Relais	Relais	Relais

SE	ES	DK	TR	
Lås upp dörr	Desbloquear puerta	Lås dør op	Kapının kilidini aç	
Svara	Responder	Svar	Yanıtla	
Volym	Volumen	Volumen	Ses Düzeyi	
Ljudlös/stör ej	Silenciar/No molestar	Mute/DND	Sessiz/Rahatsız etmeyin	
Aux 1	Aux 1	Aux 1	Aux 1	
Aux 2	Aux 2	Aux 2	Aux 2	
Ethernet	Ethernet	Ethernet	Ethernet	
Ringklocka	Timbre de la puerta	Dørklokke	Kapı zili	
Nollställ	Restablecer	Nulstil	Sıfırla	
Line out	Línea de salida	Linje ud	Hat çıkışı	
Relä	Relé	Relæ	Röle	

	≤ 1000
PoE 802.3af	12.95W
	0°C +49°C 32°F +120°F
	✗
	⟷

The declaration of conformity is available on request. Contact details are provided at: http://paxton.info/596

These products are not suitable for retail sale. All warranties are invalid if these products are not installed by a competent person.

North America:-

Product Compliance and limitations

Wiring methods shall be in accordance with the National Electrical Code (ANSI/NFPA70), local codes, and the authorities having jurisdiction.

FCC Compliance

This device complies with Part 15 of the FCC Rules. Operation is subject to the following two conditions:
(1) this device may not cause harmful interference, and (2) this device must accept any interference received, including interference that may cause undesired operation. Changes or modifications not expressly approved by the party responsible for compliance could void the user's authority to operate the equipment.

IC Compliance

This device complies with Industry Canada licence-exempt RSS standard(s). Operation is subject to the following two conditions:
(1) this device may not cause interference, and (2) this device must accept any interference, including interference that may cause undesired operation of the device.

Installation guidelines

This product is for indoor use only - all connections are also internal.

Conformité et limitations du produit

Les méthodes de câblage doivent être en accord avec le code électrique nationale (ANSI/NFPA70), codes locaux et les autorités ayant la juridiction.

Conformité FCC

Ce dispositif est conforme à la section 15 du règlement de la FCC. Le fonctionnement est soumis aux deux conditions suivantes : (1) ce dispositif ne doit pas créer d'interférences nuisibles et (2) ce dispositif doit accepter toute interférence reçue, y compris des interférences qui peuvent causer un fonctionnement non souhaité. Tout changement ou modification non agréé par la partie responsable de la mise en conformité peut entraîner une interdiction d'utilisation de l'équipement.

Conformité IC

Cet appareil est conforme avec Industrie Canada exempts de licence standard RSS (s). Son fonctionnement est soumis aux deux conditions suivantes:
(1) ce dispositif ne doit pas causer d'interférences et (2) cet appareil doit accepter toute interférence, y compris les interférences qui peuvent causer un mauvais fonctionnement de l'appareil.

Directives d'installation

Ce produit est uniquement destiné à une utilisation en intérieur - toutes les connexions sont également pour une utilisation en intérieur.

This product incorporates work covered by the following copyright and permissions notices:

Copyright (c) 2001-2004 Swedish Institute of Computer Science.

All rights reserved.

Redistribution and use in source and binary forms, with or without modification, are permitted provided that the following conditions are met:

1. Redistributions of source code must retain the above copyright notice, this list of conditions and the following disclaimer.

2. Redistributions in binary form must reproduce the above copyright notice, this list of conditions and the following disclaimer in the documentation and/or other materials provided with the distribution.

3. The name of the author may not be used to endorse or promote products derived from this software without specific prior written permission.

THIS SOFTWARE IS PROVIDED BY THE AUTHOR ``AS IS AND ANY EXPRESS OR IMPLIED WARRANTIES, INCLUDING, BUT NOT LIMITED TO, THE IMPLIED WARRANTIES OF MERCHANTABILITY AND FITNESS FOR A PARTICULAR PURPOSE ARE DISCLAIMED. IN NO EVENT SHALL THE AUTHOR BE LIABLE FOR ANY DIRECT, INDIRECT, INCIDENTAL, SPECIAL, EXEMPLARY, OR CONSEQUENTIAL DAMAGES (INCLUDING, BUT NOT LIMITED TO, PROCUREMENT OF SUBSTITUTE GOODS OR SERVICES; LOSS OF USE, DATA, OR PROFITS; OR BUSINESS INTERRUPTION) HOWEVER CAUSED AND ON ANY THEORY OF LIABILITY, WHETHER IN CONTRACT, STRICT LIABILITY, OR TORT (INCLUDING NEGLIGENCE OR OTHERWISE) ARISING IN ANY WAY OUT OF THE USE OF THIS SOFTWARE, EVEN IF ADVISED OF THE POSSIBILITY OF SUCH DAMAGE.

Copyright (c) 2013-2015 Atmel Corporation. All rights reserved.

Redistribution and use in source and binary forms, with or without modification, are permitted provided that the following conditions are met:

1. Redistributions of source code must retain the above copyright notice, this list of conditions and the following disclaimer.

2. Redistributions in binary form must reproduce the above copyright notice, this list of conditions and the following disclaimer in the documentation and/or other materials provided with the distribution.

3. The name of Atmel may not be used to endorse or promote products derived from this software without specific prior written permission.

4. This software may only be redistributed and used in connection with an Atmel microcontroller product.

THIS SOFTWARE IS PROVIDED BY ATMEL "AS IS" AND ANY EXPRESS OR IMPLIED WARRANTIES, INCLUDING, BUT NOT LIMITED TO, THE IMPLIED WARRANTIES OF MERCHANTABILITY, FITNESS FOR A PARTICULAR PURPOSE AND NON-INFRINGEMENT ARE EXPRESSLY AND SPECIFICALLY DISCLAIMED. IN NO EVENT SHALL ATMEL BE LIABLE FOR ANY DIRECT, INDIRECT, INCIDENTAL, SPECIAL, EXEMPLARY, OR CONSEQUENTIAL DAMAGES (INCLUDING, BUT NOT LIMITED TO, PROCUREMENT OF SUBSTITUTE GOODS OR SERVICES; LOSS OF USE, DATA, OR PROFITS; OR BUSINESS INTERRUPTION) HOWEVER CAUSED AND ON ANY THEORY OF LIABILITY, WHETHER IN CONTRACT, STRICT LIABILITY, OR TORT (INCLUDING NEGLIGENCE OR OTHERWISE) ARISING IN ANY WAY OUT OF THE USE OF THIS SOFTWARE, EVEN IF ADVISED OF THE POSSIBILITY OF SUCH DAMAGE.

https://paxton.info/9909

© Paxton Ltd Rev C

Paxton House, Home Farm Road, Brighton, BN1 9HU, United Kingdom

Paxton