L8542346
Rev. 07/07/00

BENINCÀ®

APRICANCELLO SCORREVOLE ELETTROMECCANICO

ELECTROMECHANICAL SLIDING GATE OPENER

ELEKTROMECHANISCHE AUTOMATION FÜR SCHIEBEGITTER

AUTOMATISATION ÉLECTROMÉCANIQUE POUR GRILLES COULISSANTES

ABRECANCELA ELECTROMECANICO PARA CORREDERAS

ELEKTROMECHANICZNY, POSUWOWY OTWIERACZ BRAM

RI.6MLS

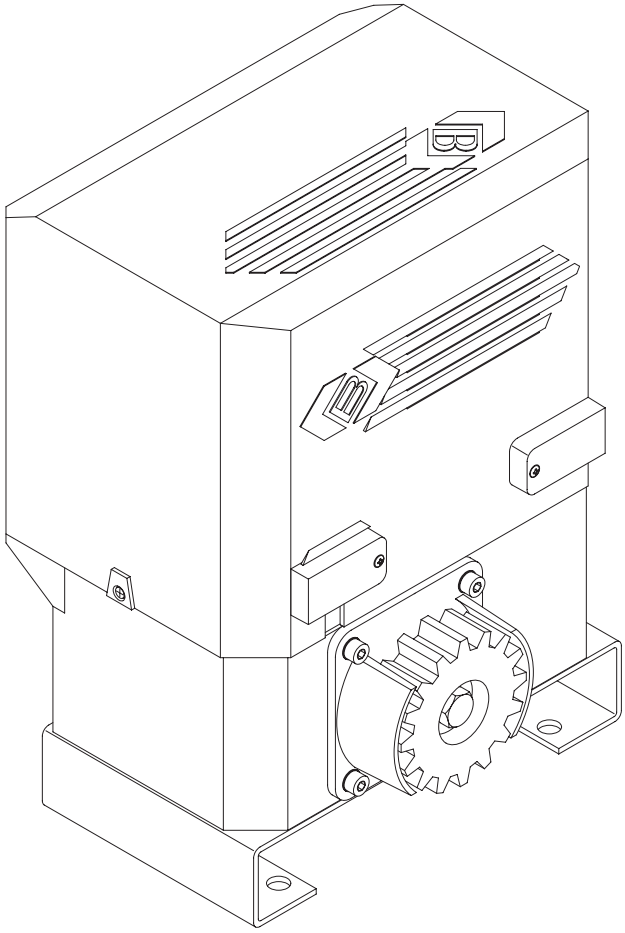

Libro istruzioni e catalogo ricambi

Operating instructions and spare parts catalogue

Betriebsanleitung und Ersatzteilliste

Livret d'instructions et catalogue des pieces de rechange

Libro de instrucciones y catálogo de recambios

Książeczka z instrukcjami i katalog części wymiennych

UNAC

UNIONE NAZIONALE COSTRUTTORI
AUTOMATISMI PER CANCELLI, PORTE
SERRANDE ED AFFINI

Dichiarazione CE di conformità per macchine
(Direttiva 89/392 CE, Allegato II, parte B)
Divieto di messa in servizio

Fabbricante: **Automatismi Benincà** SpA
Indirizzo: Via Capitello, 45 - 36066 Sandrigo (VI) - Italia

Dichiara che: l'automazione per cancelli scorrevoli modello **RI.6MLS**.

- è costruito per essere incorporato in una macchina o per essere assemblato con altri macchinari per costituire una macchina considerata dalla Direttiva 89/392 CE, come modificata;
- non è dunque conforme in tutti i punti alle disposizioni di questa Direttiva;
- è conforme alle condizioni delle seguenti altre Direttive CE:
  Direttiva bassa tensione 73/23/CEE, 93/68/CEE.
  Direttiva compatibilità elettromagnetica 89/336/CEE, 93/68/CEE.

e che:
- sono state applicate le seguenti (parti/clausole di) norme armonizzate:
  EN 55022, EN 61000-3-2, EN 61000-3-3, EN 50082-1, EN 60335-1.

e inoltre dichiara che non è consentito mettere in servizio il macchinario fino a che la macchina in cui sarà incorporato o di cui diverrà componente sia stata identificata e ne sia stata dichiarata la conformità alle condizioni della Direttiva 89/392 CE e alla legislazione nazionale che la traspone, vale a dire fino a che il macchinario di cui alla presente dichiarazione non formi un complesso unico con la macchina finale.

Benincà Luigi, Responsabile legale.
Sandrigo, 01/06/2007.

Declaration by the manufacturer
(Directive 89/392/EEC, Art. 4.2 and Annex II, sub B)
Divieto di messa in servizio

Manufacturer: **Automatismi Benincà** SpA
Address: Via Capitello, 45 - 36066 Sandrigo (VI) - Italia

Herewith declares that: the operator for sliding gates model **RI.6MLS**.

- is intended to be incorpored into machinery or to be assembled with other machinery to constitute machinery covered by Directive 89/392 EEC, as amended;
- does therefore not in every respect comply with the provisions of this Directive;
- does comply with the provisions of the following other EEC Directives:
  Direttiva bassa tensione 73/23/CEE, 93/68/CEE.
  Direttiva compatibilità elettromagnetica 89/336/CEE, 93/68/CEE.

and that:
- the following (parts/clauses of) harmonized standards have been applied:
  EN 55022, EN 61000-3-2, EN 61000-3-3, EN 50082-1, EN 60335-1.

and furthermore declares that it is not allowed to put the machinery into service until the machinery into which it is to be incorporated or of which it is to be a component has been found and declared to be in conformity with the provisions of Directive 89/392/EEC and with national implementing legislation, i.e. as a whole, including the machinery referred to in this declaration.

Benincà Luigi, Responsabile legale.
Sandrigo, 01/06/2007.

Dati tecnici	Technical data	Technische Daten	*Donnees technique*	Datos técnicos	Dane techniczne	RI.6MLS
Alimentazione	**Feed**	*Speisung*	***Alimentation***	Alimentación	Napięcie	**230V**
Potenza	**Rating**	*Leistung*	***Puissance***	Potencia	Moc	**280W**
Assorbimento	**Absorption**	*Verbrauch*	***Absorption***	Absorción	Pobór mocy	**1,6A**
Coppia	**Torque**	*Kräftepaar*	***Couple***	Par	Moment obrotowy	**36Nm**
Rapporto di riduzione	**Reduction ratio**	*Untersetzungsverhältnis*	***Rapport de reduction***	Relación de reducción	Przełożenie redukcji	**0,042**
Classe di isolamento	**Insulation class**	*Isolierklasse*	***Classe d'isolement***	Clase de aislamiento	Klasa izolacji	**F**
Interv. termoprotez.	**Thermoprot. interv.**	*Eingriff Thermorelais*	***Interv. protect. therm.***	Interv. termoprotección	Interw. Termostatu	**130°C**
Temp. funzionamento	**Working temperature**	*Betriebstemperatur*	***Temp. fonctionnement***	Temp. funcionamiento	Temp. podczas pracy	**-20°C/+70°C**
Peso max. cancello	**Max. gate weight**	*Gittersgewicht max.*	***Poids max. portail***	Peso máx. de la cancela	Ciężar max. Bramy	**600kg**
Velocità apertura	**Opening speed**	*Öffnungsgeschwindigkeit*	***Vitesse d'ouverture***	Velocidad de apertura	Szybkość otwierania	**8,48m/min**
Condensatore	**Condenser**	*Kondensator*	***Condensateur***	Condensador	Kondensator	**16µF**
Lubrificazione	**Lubrication**	*Schmierung*	***Lubrification***	Lubrificación	Smarowanie	**Agip Blasia 100**
Peso	**Weight**	*Gewicht*	***Poids***	Peso	Ciężar	**13kg**
Dimensioni	**Dimensions**	*Masse*	***Dimensions***	Dimensiones	Wymiary	**215x235xH270mm**

Fig.1

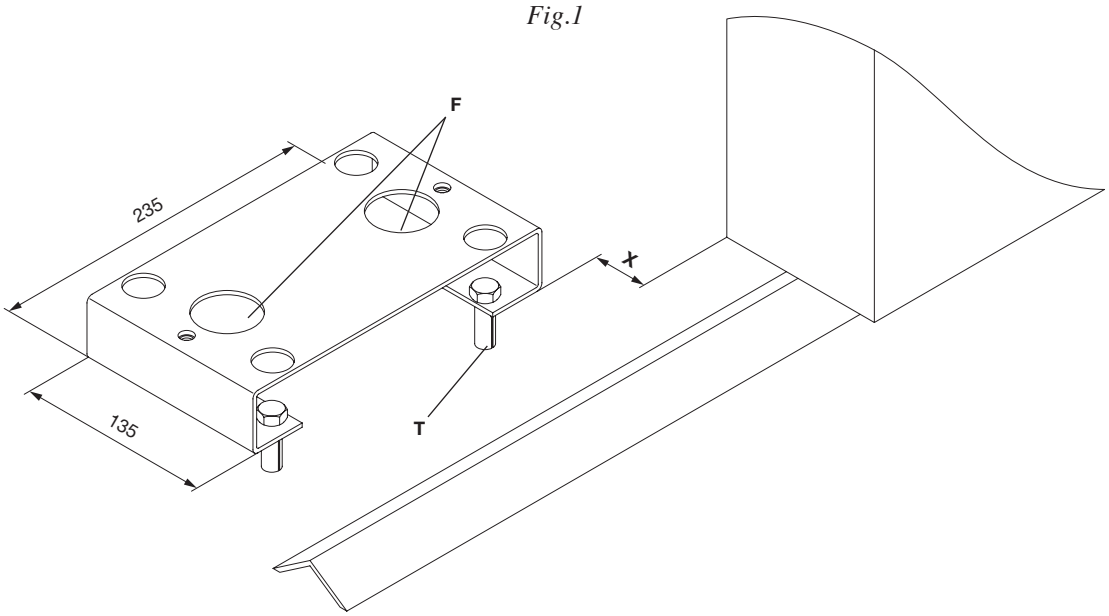

X≈ 50 per cremagliera in Fe 30x12
X≈ 55 per cremagliera in nylon

X≈ 50 for Fe 30x12 rack
X≈ 55 for nylon rack

X≈ 50 für Zahnstange aus Stahl 30x12
X≈ 55 für Zahnstange aus Nylon

X≈ 50 pour cremaillére en acier 30x12
X≈ 55 pour cremaillére en nylon

X≈ 50 para cremallera Fe 30x12
X≈ 55 para cremallera de nylon

X = 50 dla zębatki z Fe 30x12
X = 55 dla zębatki z nylonu

Fig.2

Cremagliera in Fe
Fe rack
Zahnstange aus Stahl
Cremaillére en acier
Cremallera en Fe
Zębatka z Fe

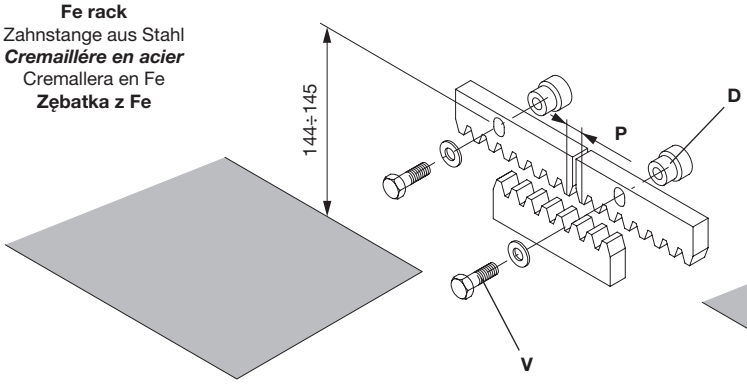

Cremagliera in nylon
Nylon rack
Zahnstange aus Nylon
Cremaillére en nylon
Cremallera en nylon
Zębatka z nylonu

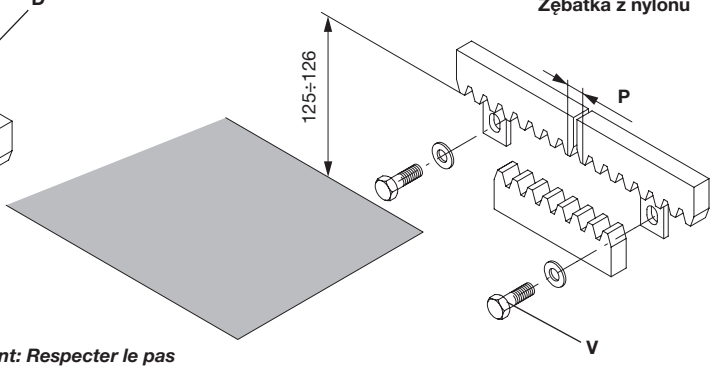

N.B.: Rispettare il passo
Important: Keep the pitch
Wichtig: Zahnteilung einhalten

Important: Respecter le pas
NOTA: Respetar el paso
Uwaga: przestrzegać posuwu

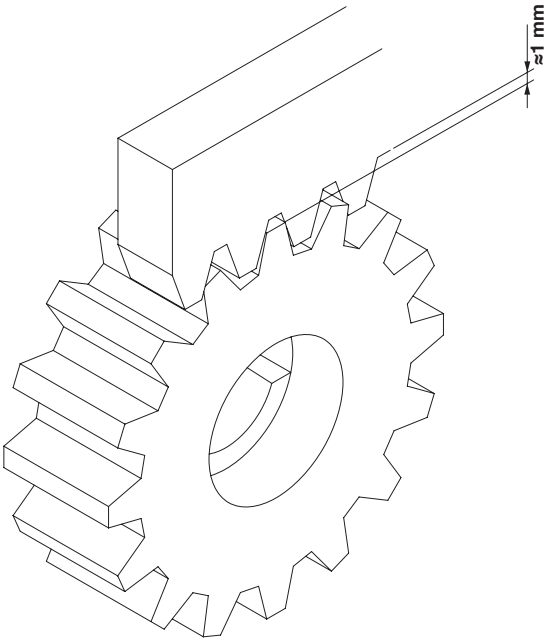

Fig.3

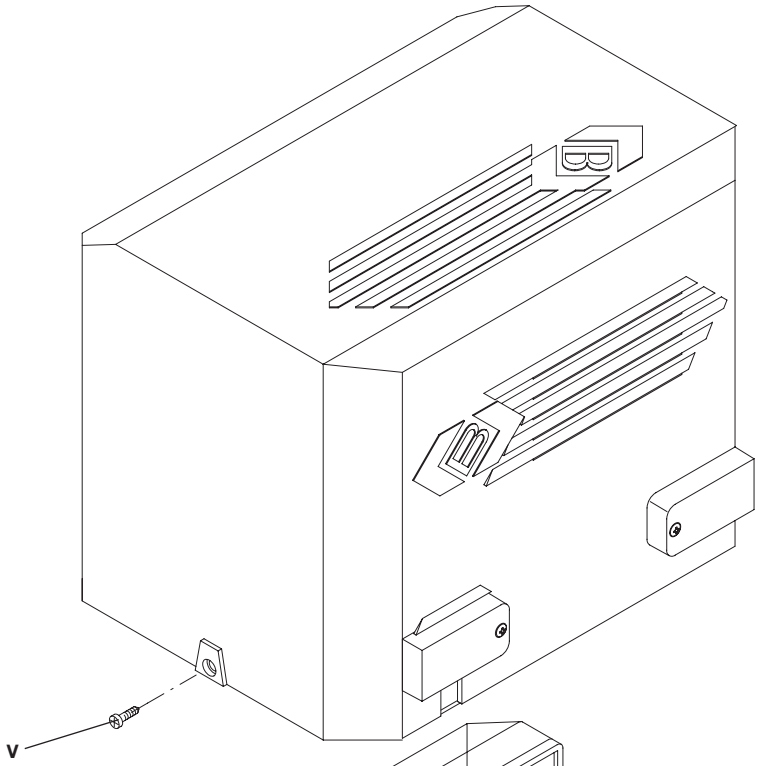

Posizionare in altezza rispetto alla cremagliera e mettere in bolla.
Place higher than rack and level.
Senkrecht gegenüber der Zahnstange positionieren und ausrichten.
Réglage en hauteur par rapport à la cremaillére et mise en niveau horizontal.
Posicionar en altura con respecto a la cremallera y apretar.
Umieścić na wskazanej wysokości względem zębatki i ułożyć w pozycji poziomej

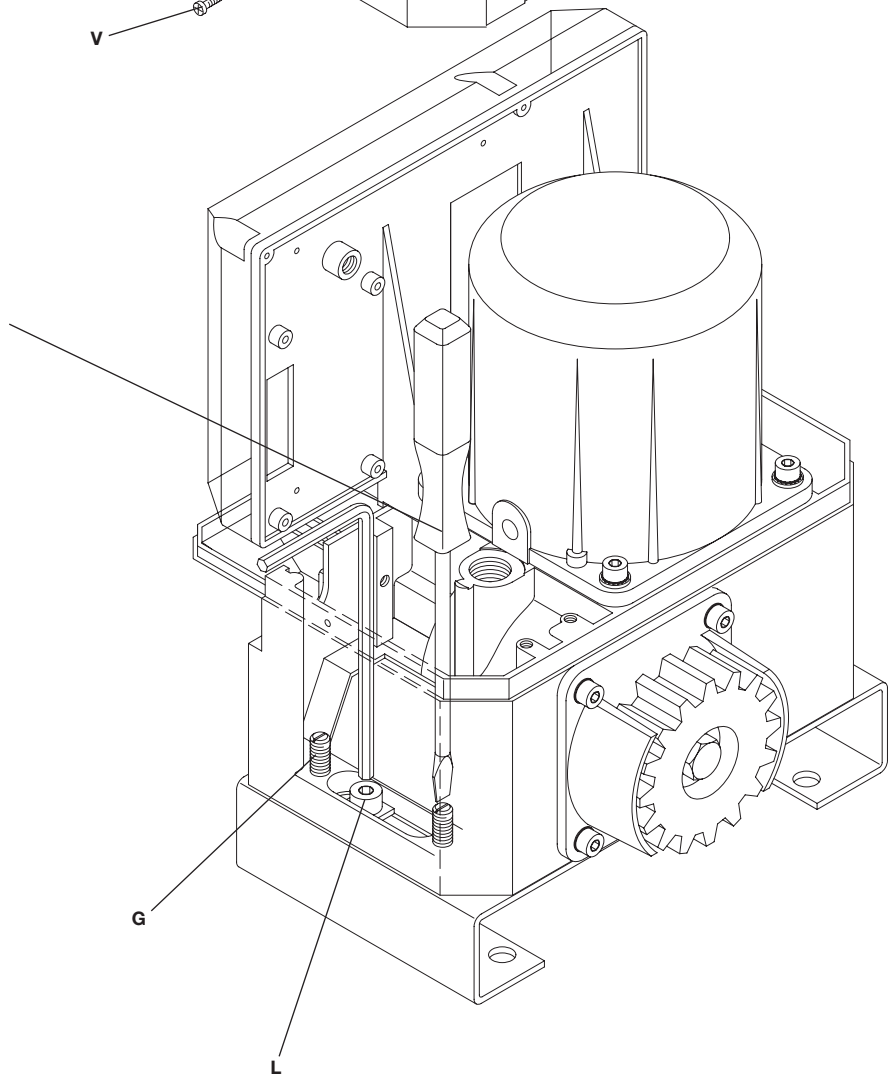

Sensori magnetici
Magnetic sensors
Magnetische Sensoren
Senseurs magnétiques
Sensores magnéticos
Czujniki magnetyczne

Magnete
Magnet
Halterungsmagneten
Aimants
Imanes
Magnesy

Staffa finecorsa
Limit switch brackets
Bügeln des Endschalters
Étriers de fin de course
Sujeciones del final de carrera
Zaczep krańcówki

1 ÷ 3 cm

A

N.B.: La staffa del finecorsa deve essere posizionata in modo tale da permettere l'arresto del cancello senza che questo vada a sbattere contro l'arresto meccanico

N.b. The limit stop flask must be positioned to ensure that the gate stops without knocking against the mechanical stop.

Der Endanschlagtbügel muß so positioniert werden, daß die Sperre des Gitters ohne das Flattern des Schiebegitters gegen den Endschalter A erfolgen kann.

N.B. L'étrier de fin de course doit être positionné de façon à pouvoir arrêter le portail, sans qu'il aille bûter sur le fin de course mécanique.

NOTA: La pletina del final de carrera debe ser colocada de tal forma que permita la parada de la cancela sin que ésta vaya a tocar con el tope mecánico.

Uwaga: Zaczep krańcówki musi być w pozycji takiej by możliwe było zatrzymanie bramy niedopuszczając do jej zderzenia z zaporą mechaniczną.

Fig.5

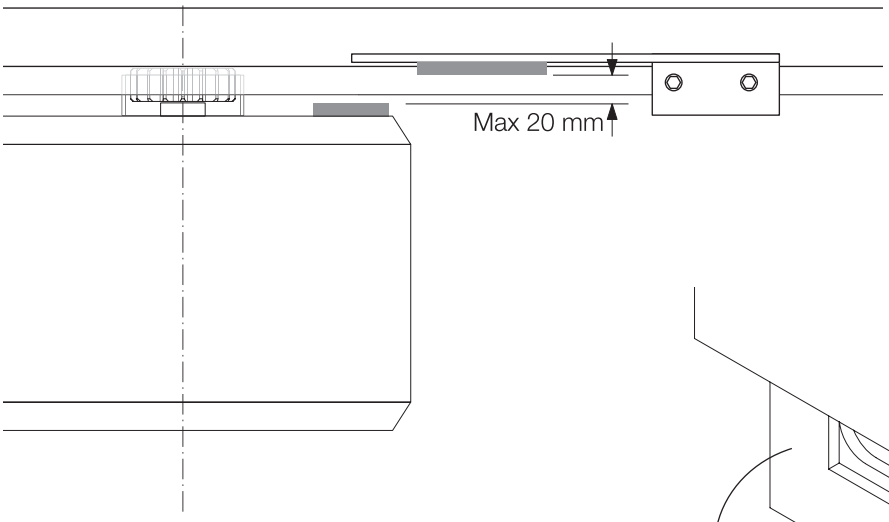

Fig.6

Fig.7

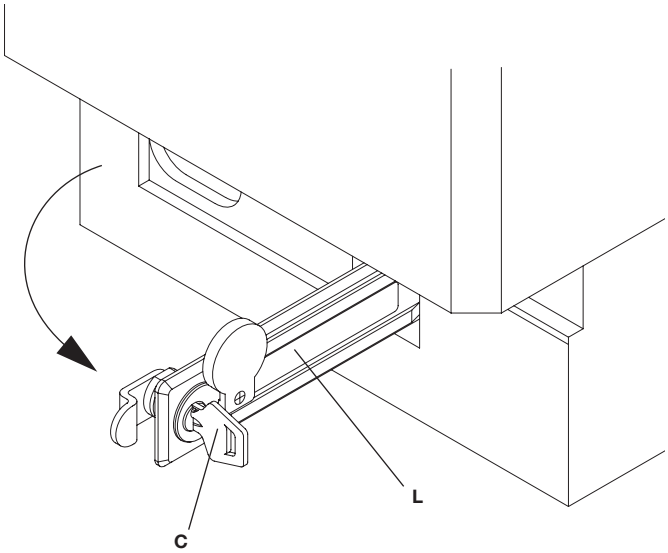

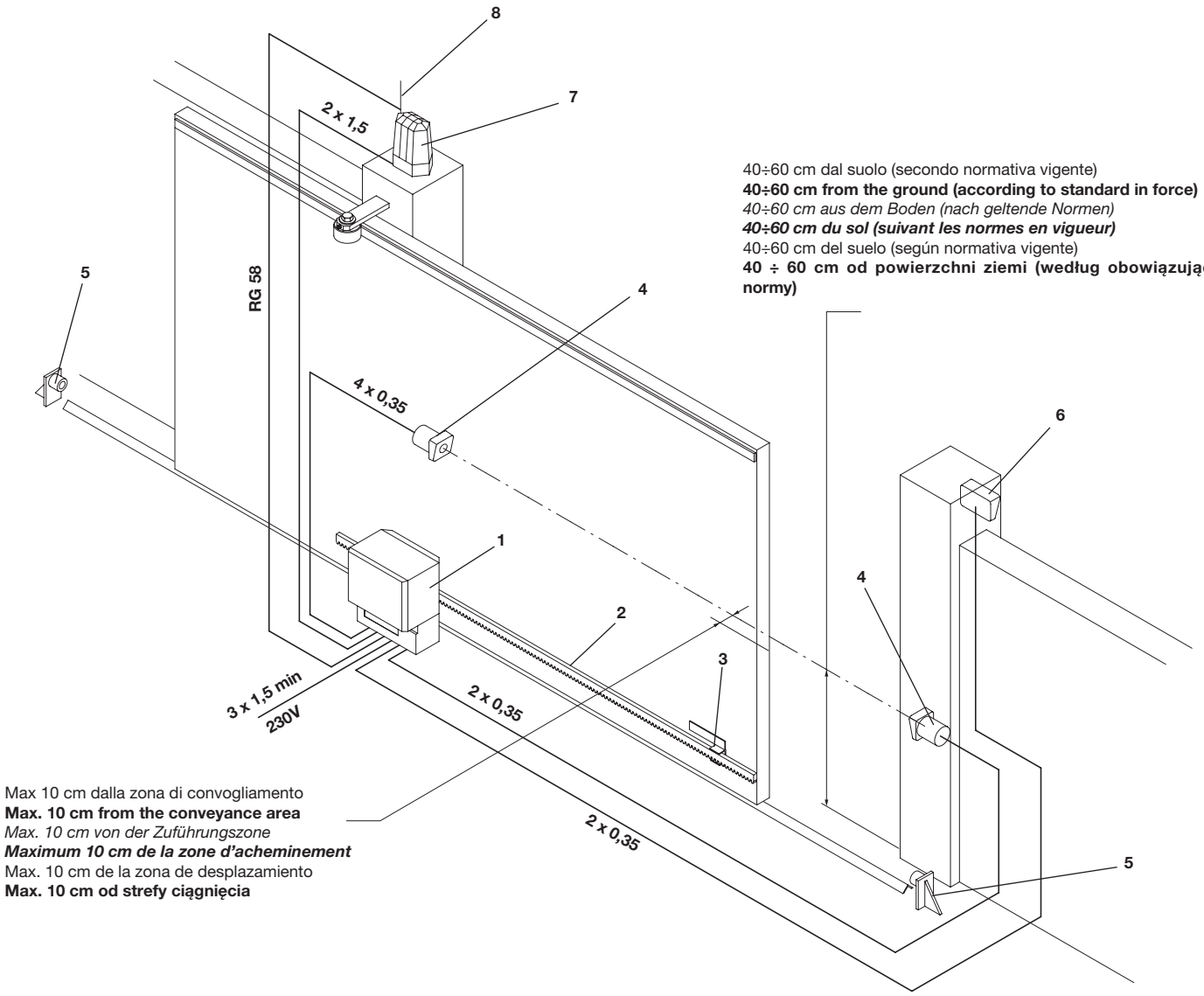

Legenda:
1 Motoriduttore con centralina incorporata
2 Cremagliera
3 Staffe dei finecorsa
4 Fotocellule SC.P50 (da incasso), SC.P50E (da esterno)
5 Fermi meccanici
6 Selettore a chiave o tastiera digitale ID.SC o ID.SCE
7 Lampeggiante ID.LUX
8 Antenna LO.E1N

Legenda:
1 Ratio-motor complete with gear case
2 Rack
3 Limit stop flasks
4 Photo-electric cells SC.P50 (built in), SC.P50E (external)
5 Mechanical stop
6 Key or digital keyboard selector ID.SC or ID.SCE
7 Blinker ID.LUX
8 Antenna LO.E1N

Zeichenerklärung:
1 Drehzahlminderer mit eingebauter Schaltanlage
2 Zahnstange
3 Endschlagbügel
4 Fotozelle SC.P50 (eingelegt), SC.P50E (außerlich)
5 Mech. Endanschlag
6 Schlüssel-Selektor oder Digital-Tastatur ID.SC oder ID.SCE
7 Blinklicht ID.LUX
8 Antenne LO.E1N

Légende:
1 Motoréducteur avec circuit intégré
2 Cremaillére
3 Etriers de fin de course
4 Photocellules SC.P50 (encastrée), SC.P50E (d'extérieur)
5 Bûtée mécanique
6 Sélecteur à clef ou à clavier ID.SC ou ID.SCE
7 Feu clignotant ID.LUX
8 Antenne LO.E1N

Leyenda:
1 Motorreductor con centralita incorporada
2 Cremallera
3 Pletinas de los finales de carrera
4 Fotocélulas SC.P50 (de empotrar), SC.P50E (de superficie)
5 Topes mecánicos
6 Selector a llave o teclado digital ID.SC o ID.SCE
7 Relampagueador ID.LUX
8 Antena LO.E1N

Objaśnienia:
1. Siłownik z centralką wbudowaną
2. Zębatka
3. Zawieszki wyłączników posuwu
4. Fotokomórki SC.P50 (do wbudowania), SC.P50E (zewnętrzne)
5. Blokady mechaniczne
6. Przełącznik kluczowy lub panel sterujący ID.SC lub ID.SCE
7. Światło migające ID.LUX
8. Antena LO.E1N

Fig.7

1. General information

For an efficient operation of the sliding automatic mechanism, the gate must have the following features:

- The guide rail and its wheels must be suitable in size and mantained to prevent gate from excessive sliding friction.
- When running, gate must not rock excessively.
- Opening and closing stroke must be regulated by a mechanical limit stop (to safety standard in force).

2. General features

Automation for private use sliding gates (max. gate weight 600Kg).
The small and elegant design enbloc RI.6MLS consists of a painted aluminium unit containing the motor and irreversible reduction unit, realized with high-grade materials. The reduction parts are completely immersed in oil. The RI.6MLS is equipped with magnetic limit switches.
A personalized key emergency release enables manual gate operation in the event of power failure.

3. Foundation slab laying

Secure the foundation slab to the ground with no. 4 steel T pressure inserts to dimensions given in fig. 1 (it's important the slab is securely fastened to the ground).
N.B.: Go through holes F with a sheath suitable to the actuator feed cables.

4. Rack fixing

4.1 Nylon rack (fig. 2)
Place the rack at a height of 125 ÷ 126 mm from the base of the foundation slab up to the rack tooth head; drill and thread M6 the gate approx. in the center line between the rack slots. Now secure the rack and refer to points 4.3 and 4.4 before proceeding.
4.2 Fe 12x30 mm rack (fig. 2)
Weld or screw the spacer pins D onto the gate at 144 ÷ 145 mm above the base of the foundation actuator slab and maintain the same pitch as the rack drilling. Now secure the rack and refer to points 4.3 and 4.4 before proceeding.
4.3 Keep the pitch of teeth between the two parts of the rack; the joining with another piece of rack would make it easier to achieve (see fig. 2)
4.4 Secure the rack with the screws V making sure, once the actuator has been installed, that between rack and the drive gear there is always approx. 1 mm clearance (see fig. 3); to get this clearance use the slots on the rack.

5. Actuator positioning and fixing (see fig. 4)

Remove the case by untightening the screws V. Place the actuator unit so that the gear is centered to the rack; level it with the grains G and if necessary adjust the clearance between rack and gears (according to fig. 3). Now tighten the screws L.

6. Limit stop flask positioning (see fig. 5)

Open manually the gate and leave approximately of 1÷3 cm, depending on gate weight, between gate and positive mechanical stop A.
Using the dowels provided, secure the limit switch bracket as shown in Fig. 5, in reversed position, so that the bracket will not stick out of the rack.
Position the magnet to the bracket and after you have located the sensor's switch point, secure the magnet to the bracket with a screw. The gap between magnet and sensor should not exceed 20mm (Fig.6).
Repeat the procedure with door closing.

7. Manual operation

To operate the gate manually, use the release as follows (see fig. 7):

- once inserted the personalized key C, turn it anticlockwise and pull the lever L.
- to reset the standard operation running, close the lever L and operate the gate manually, until engagement.

CAUTION

The civil liability policy, which covers possible injuries to people or accidents caused by defects in construction, requires the system to be to existing standard and to use original Benincà accessories.

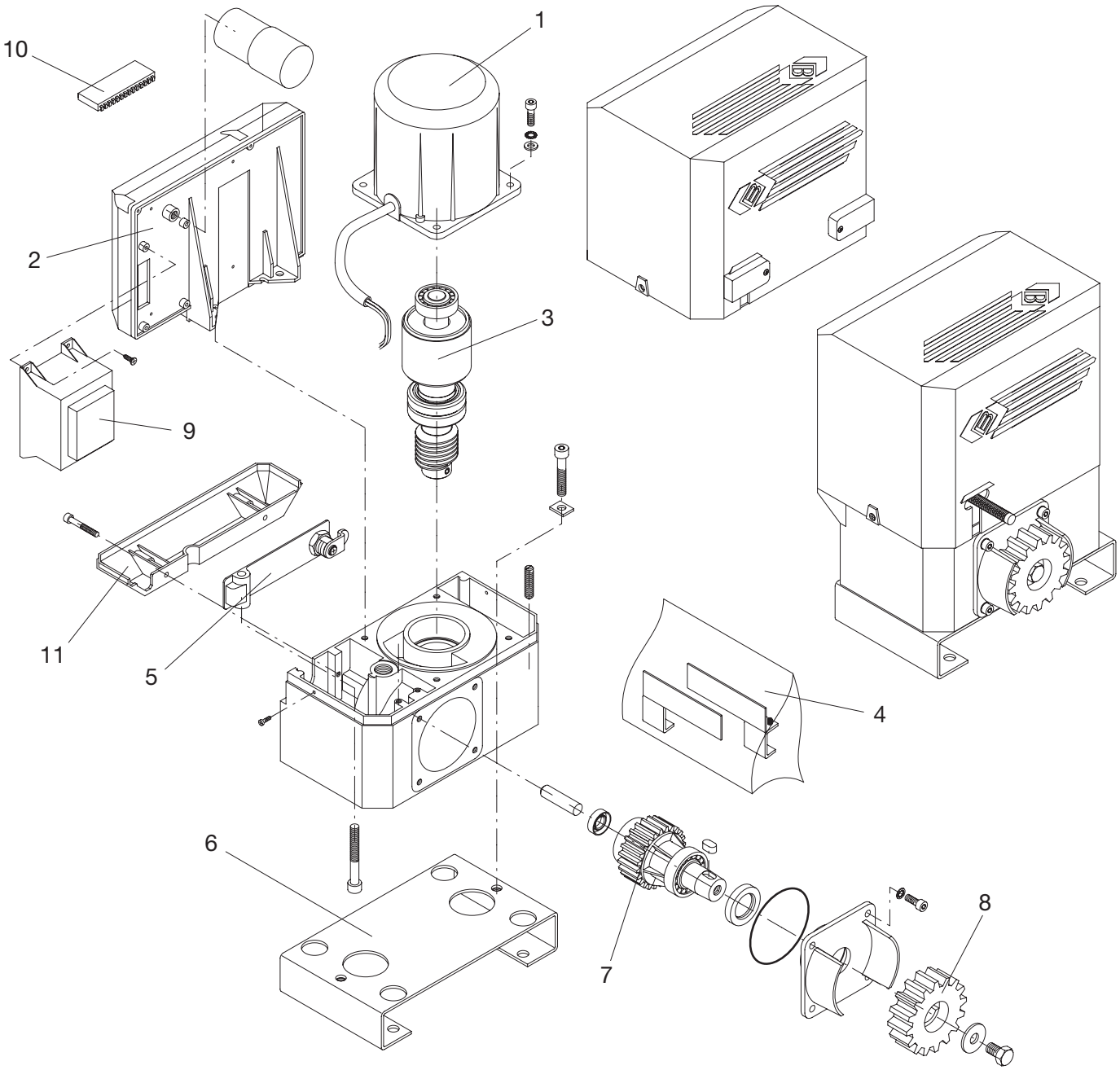

Pos.	Denominazione - Description - Bezeichnung - Dénomination - Denominación - Określenie						Cod.
1	Calotta motore	**Motor cup**	*Motor Deckel*	***Calotte moteur***	Tapa estator	Kalota silnika	9686024
2	Centrale	**Elect. gearcase**	*Schaltanlage*	***Centrale électr.***	Centralita	Centralka elektr.	9686029
3	Albero motore	**Driving shaft**	*Antriebswelle*	***Arbre moteur***	Eje motor	Wał silnika	9686026
4	Blister	**Blister**	*Blister*	***Blister***	Blister	Blister	9686084
5	Leva di sblocco	**Release lever**	*Hebel*	***Levier***	Pal. de desbloq.	Dźwignia odrygl.	9686033
6	Piastra base	**Foundat. plate**	*Fundamentplatte*	***Plaque fondat.***	Placa de fundac.	Płyta podstawy	9686031
7	Albero uscita	**Output shaft**	*Antriebszapfen*	***Arbre***	Eje de salida	Wał wyjściowy	9686028
8	Ingranaggio	**Gear**	*Zahnrad*	***Engrenage***	Piñon	Koło zębate	9686032
9	Trasformatore	**Transformer**	*Transformator*	***Trasformateur***	Trasformador	Transformator	9686208
10	Microprocessore	**Microprocessor**	*Mikroprozessor*	***Microprocesseur***	Microprocesor	Mikroprocesor	9686864
11	Carter inferiore	**Cover**	*Deckel*	***Couvercle***	Tapa	Karter	9686997

BENINCÀ®

AUTOMATISMI BENINCÀ SpA - Via Capitello, 45 - 36066 Sandrigo (VI) - Tel. 0444 751030 r.a. - Fax 0444 759728