L8542111
Rev. 01/05/04

BENINCA®

APRICANCELLO ELETTROMECCANICO

ELECTROMECHANICAL GATE OPENER

ELEKTROMECHANISCHE AUTOMATION FÜR SCHIEBEGITTER

AUTOMATISATION ÉLECTROMÉCANIQUE POUR GRILLES

ABRECANCELA ELECTROMECANICO

ELEKTROMECHANICZNY OTWIERACZ BRAM

DU.IT9N

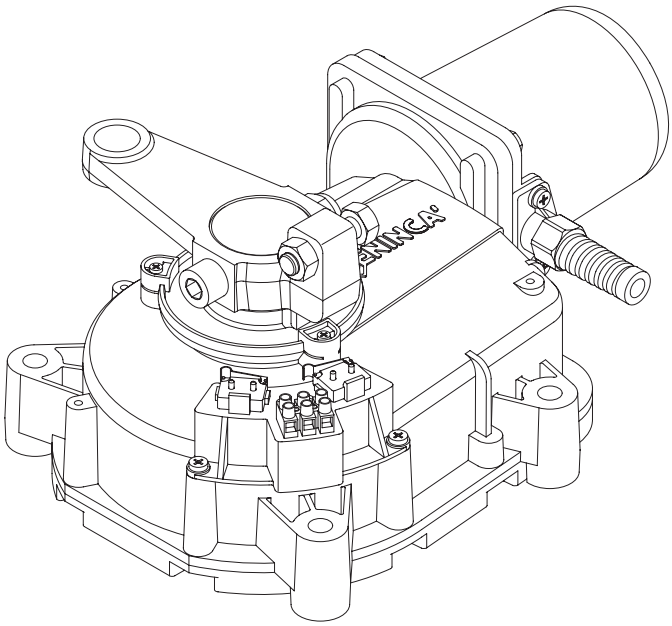

Manual istruzioni e catalogo ricambi

Operating instructions and spare parts catalogue

Betriebsanleitung und Ersatzteilliste

Livret d'instructions et catalogue des pieces de rechange

Manual de instrucciones y catálogo de recambios

Książeczka z instrukcjami i katalog części wymiennych

UNAC

UNIONE NAZIONALE COSTRUTTORI
AUTOMATISMI PER CANCELLI, PORTE
SERRANDE ED AFFINI

Dichiarazione CE di conformità per macchine
(Direttiva 89/392 CE, Allegato II, parte B)
Divieto di messa in servizio

Fabbricante: **Automatismi Benincà** SpA.
Indirizzo: Via Capitello, 45 - 36066 Sandrigo (VI) - Italia

Dichiara che: l'automazione per cancelli a battente modello **DU.IT9N**.

- è costruito per essere incorporato in una macchina o per essere assemblato con altri macchinari per costituire una macchina considerata dalla Direttiva 89/392 CE, come modificata;
- non è dunque conforme in tutti i punti alle disposizioni di questa Direttiva;
- è conforme alle condizioni delle seguenti altre Direttive CE:
  Direttiva bassa tensione 73/23/CEE, 93/68/CEE.
  Direttiva compatibilità elettromagnetica 89/336/CEE, 93/68/CEE.

e che:
- sono state applicate le seguenti (parti/clausole di) norme armonizzate:
  EN 61000-6-3, EN 61000-6-1, EN 60335-1.

e inoltre dichiara che non è consentito mettere in servizio il macchinario fino a che la macchina in cui sarà incorporato o di cui diverrà componente sia stata identificata e ne sia stata dichiarata la conformità alle condizioni della Direttiva 89/392 CE e alla legislazione nazionale che la traspone, vale a dire fino a che il macchinario di cui alla presente dichiarazione non formi un complesso unico con la macchina finale.

Benincà Luigi, Responsabile legale.
Sandrigo, 05/10/2005.

Declaration by the manufacturer
(Directive 89/392/EEC, Art. 4.2 and Annex II, sub B)
Divieto di messa in servizio

Manufacturer: **Automatismi Benincà** SpA.
Address: Via Capitello, 45 - 36066 Sandrigo (VI) - Italia

Herewith declares that: the operator for hinged gates model **DU.IT9N**.

- is intended to be incorpored into machinery or to be assembled with other machinery to constitute machinery covered by Directive 89/392 EEC, as amended;
- does therefore not in every respect comply with the provisions of this Directive;
- does comply with the provisions of the following other EEC Directives:
  Direttiva bassa tensione 73/23/CEE, 93/68/CEE.
  Direttiva compatibilità elettromagnetica 89/336/CEE, 93/68/CEE.

and that:
- the following (parts/clauses of) harmonized standards have been applied:
  EN 61000-6-3, EN 61000-6-1, EN 60335-1.

and furthermore declares that it is not allowed to put the machinery into service until the machinery into which it is to be incorporated or of which it is to be a component has been found and declared to be in conformity with the provisions of Directive 89/392/EEC and with national implementing legislation, i.e. as a whole, including the machinery referred to in this declaration.

Benincà Luigi, Responsabile legale.
Sandrigo, 05/10/2005.

Dati tecnici	Technical data	Technische Daten	*Donnees technique*	Datos técnicos	Dane techniczne	DU.IT9N
Alimentazione	**Power supply**	*Speisung*	***Alimentation***	Alimentación	Zasilanie	**230 Vac**
Potenza assorbita	**Absorbed rating**	*Leistung*	***Puissance absorbée***	Potencia absorbida	Pobór mocy	**300W**
Corrente assorbita	**Absorbed current**	*Strom-Verbrauch*	***Courant absorbé***	Corriente absorbida	Pobór prądu	**1,75 A**
Coppia	**Torque**	*Drehmoment*	***Couple***	Empuje	Moment obrotowy	**360 Nm**
Rapporto di riduzione	**Reduction ratio**	*Untersetzungsverhältnis*	***Démultiplicatione***	Relación de reducción	Przełożenie redukcji	**0,0007**
Classe isolamento	**Insulation class**	*Isolierklasse*	***Classe d'isolement***	Clase de aislamiento	Klasa izolacji	**F**
Peso max anta	**Max. wing weight**	*Max. Flügelwicht*	***Poids max. porte***	Peso máx. de hoja	Max ciężar skrzydła bramy	**500 kg**
Tempo per compiere 90°	**90° rotation time**	*90° Öffnungszeit*	***Temps emp. pour 90°***	Tiempo para abrir 90°	Czas na wykon. przes.do 90°	**≈ 30 s**
Lunghezza max. anta	**Max. wing width**	*Max. Flügellänge*	***Longueur max. porte***	Longitud máx. hoja	Max długość skrzydła bramy	**4 m**
Temper. funzionamento	**Operating temperature**	*Laufzeit*	***Température de fonct.***	Temperatura funcionam.	Temper. podczas pracy	**-20°C/+70°C**
N° manovre consecutive	**N° contin. manoeuvres**	*N. Vorgänge hintereinan.*	***N. manoeuvres conséc.***	N° maniobras consec.	Nr. kolejno następ. manew.	**9**
Grado di protezione	**Protection degree**	*Schutzgrad*	***Degré de protection***	Grado de protección	Stopień ochrony	**IP57**
Protezione termica	**Thermal protection**	*Thermoschutz*	***Protection thermique***	Protección térmica	Ochrona termiczna	**150°C**
Rumorosità	**Noise level**	*Geräuschentwicklung*	***Bruit***	Ruido	Hałaśliwość	**<70dB (a)**
Condensatore	**Capacitor**	*Kondensator*	***Condensateur***	Condensador	Kondensator	**12,5 µF**
Lubrificazione	**Lubrication**	*Schmierung*	***Lubrification***	Lubrificación	Smarowanie	**Grasso GR LP1**
Peso motoriduttore	**Gearde motor weight**	*Getriebemotor Gewicht*	***Poids motoréducteur***	Peso motor	Ciężar siłownika	**11,6 kg**
Peso cassa	**Casing weight**	*Deckel Gewicht*	***Poids caisson***	Peso caja	Ciężar obudowy	**8,6 kg**

Dimensioni d'ingombro
Overall dimensions
Abmessungen
Dimensions d'encombrement
Dimensiones exteriores
Wymiary gabarytowe

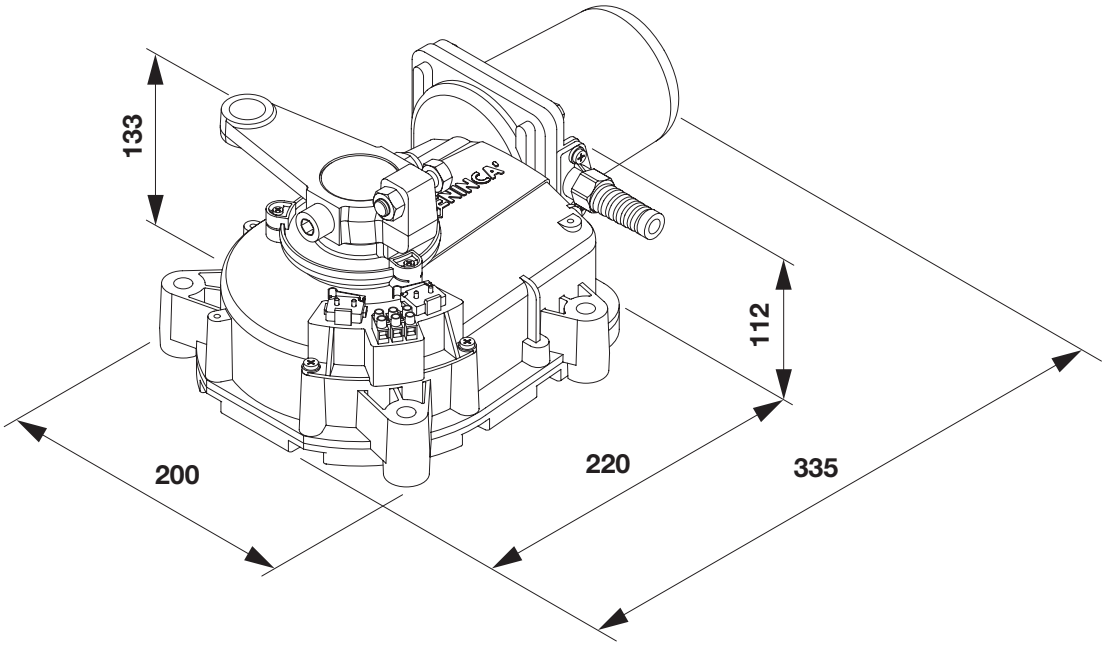

Fig.1

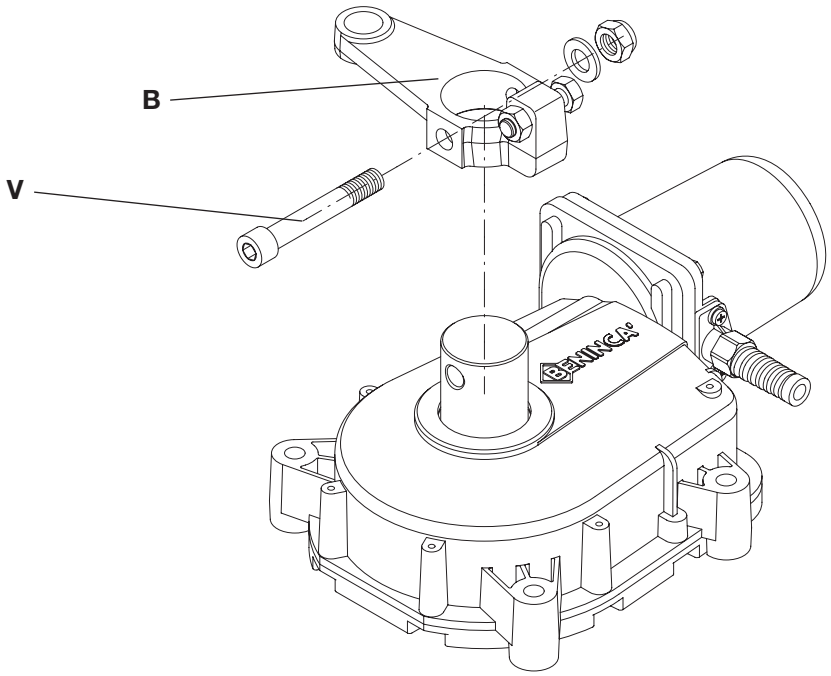

Fig.2

Muro.
Wall.
Wand.
Mur.
Muro.
Mur

105°

Apre.
Open.
Öffnen.
Ouvre.
Abre.
Otwarcie

Standard.
Standard.
Standard.
Standard.
Standard.
Standard.

Apre.
Open.
Öffnen.
Ouvre.
Abre.
Otwarcie

105°

Muro.
Wall.
Wand.
Mur.
Muro.
Mur

Anta.
Gate wing.
Torflügel.
Porte.
Hoja.
Skrzydło bramy.

R

Anta.
Gate wing.
Torflügel.
Porte.
Hoja.
Skrzydło bramy.

Posizione motoriduttore.
Reduction gear position.
Stellung Getriebemotor.
Position motoréducteur.
Posición del motorreductor.
Pozycja siłownika

S

95°

Apre.
Open.
Öffnen.
Ouvre.
Abre.
Otwarcie

Apre.
Open.
Öffnen.
Ouvre.
Abre.
Otwarcie

S

95°

Posizione motoriduttore.
Reduction gear position.
Stellung Getriebemotor.
Position motoréducteur.
Posición del motorreductor.
Pozycja siłownika

Interno.
Inside.
Innenraum.
Intérieur.
Interior.
Wnętrze obudowy

Muro.
Wall.
Wand.
Mur.
Muro.
Mur

Anta.
Gate wing.
Torflügel.
Porte.
Hoja.
Skrzydło bramy.

R

Anta.
Gate wing.
Torflügel.
Porte.
Hoja.
Skrzydło bramy.

Muro.
Wall.
Wand.
Mur.
Muro.
Mur

Fig.3

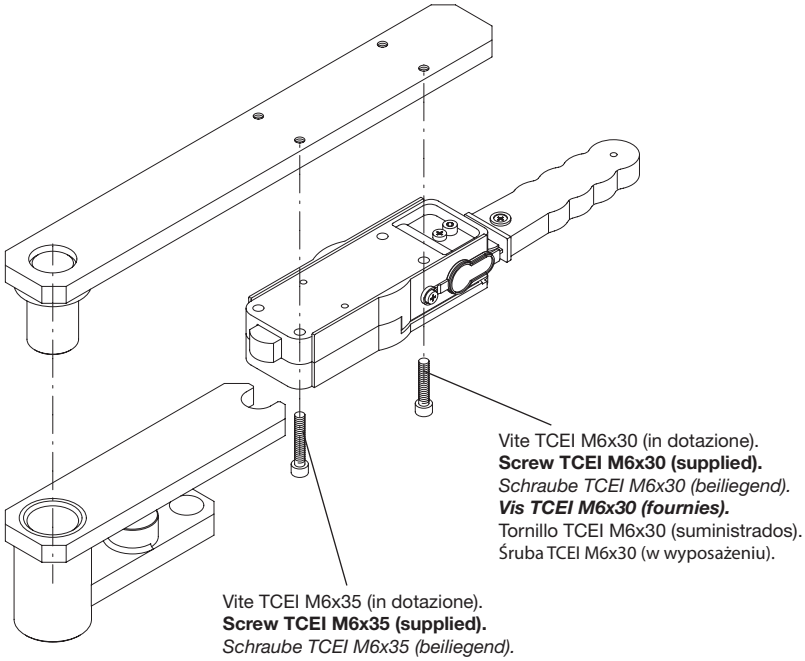

Fig.4

Fig.5

Curare l'allineamento tra la cerniera superiore ed il perno.
Align the top hinge with the pivot.
Oberes Scharnier und Zapfen sind aufeinander auszurichten.
Soigner l'alignement entre la charnière supérieure et le pivot.
Cuidar la alineación entre la bisagra superior y el perno.
Dbać o równopadłość linii pomiędzy górnym wpustem a sworzniem.

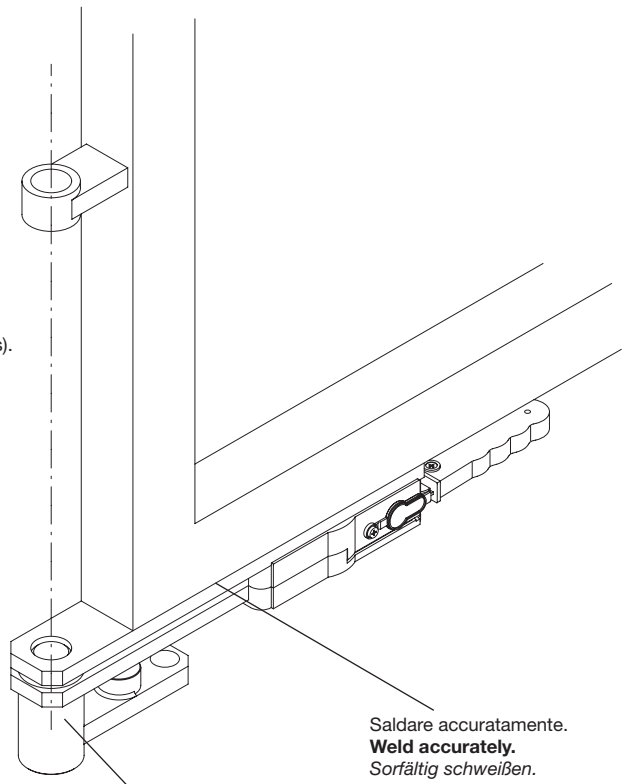

Saldare accuratamente.
Weld accurately.
Sorfältig schweißen.
Souder parfaitement.
Soldar cuidadosamente.
Przyspawać dokładnie.

Gruppo di traino.
Drive unit.
Zuggruppe.
Entrainement.
Grupo de arrastre.
Zespół ciągnący.

Gruppo di traino.
Drive unit.
Zuggruppe.
Entrainement.
Grupo de arrastre.
Zespół ciągnący.

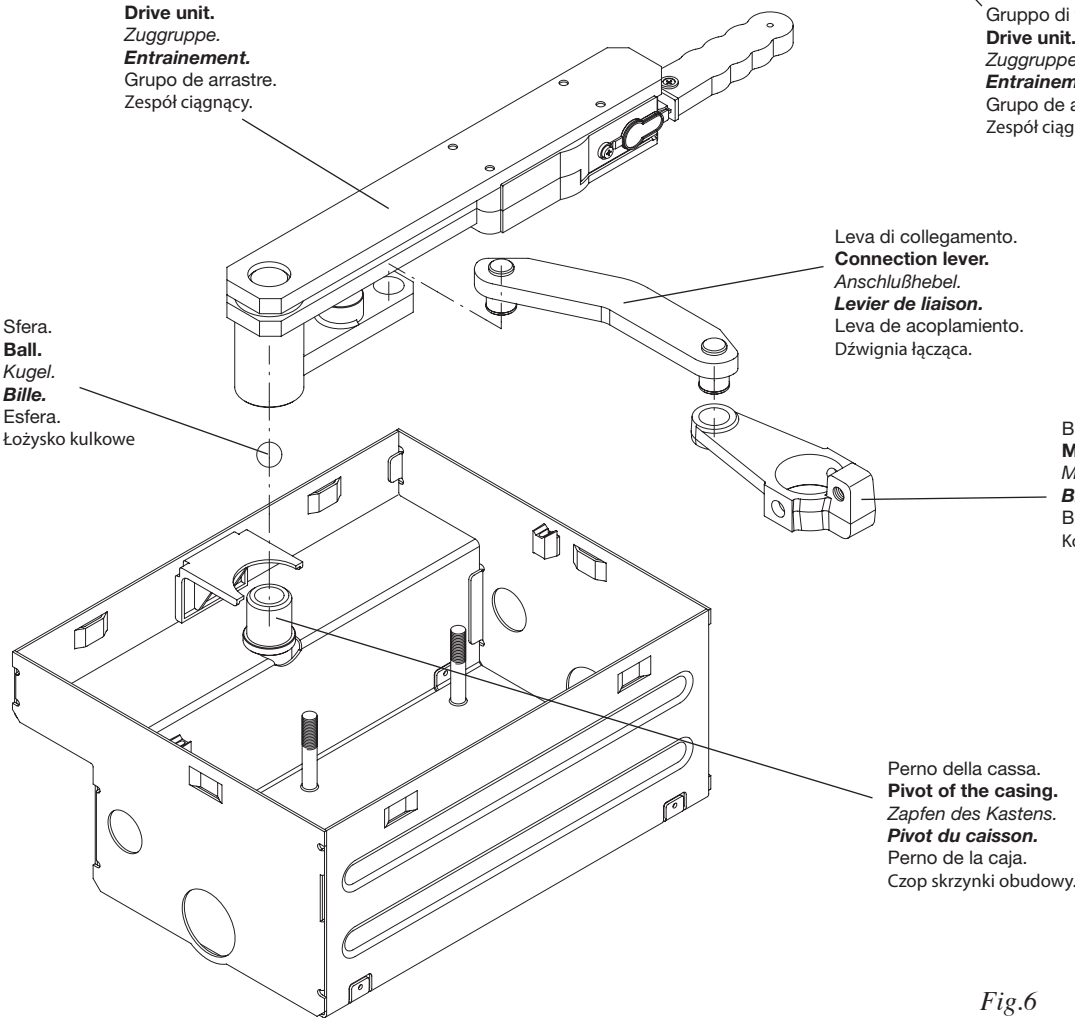

Leva di collegamento.
Connection lever.
Anschlußhebel.
Levier de liaison.
Leva de acoplamiento.
Dźwignia łącząca.

Sfera.
Ball.
Kugel.
Bille.
Esfera.
Łożysko kulkowe

Biella motore.
Motor connecting rod.
Motorpleuel.
Bielle moteur.
Biela del motor.
Korbowód silnika.

Perno della cassa.
Pivot of the casing.
Zapfen des Kastens.
Pivot du caisson.
Perno de la caja.
Czop skrzynki obudowy.

Fig.6

Montaggio standard.
Standard assembly.
Standardmontage.
Montage standard.
Montaje standard.
Montaż standard.

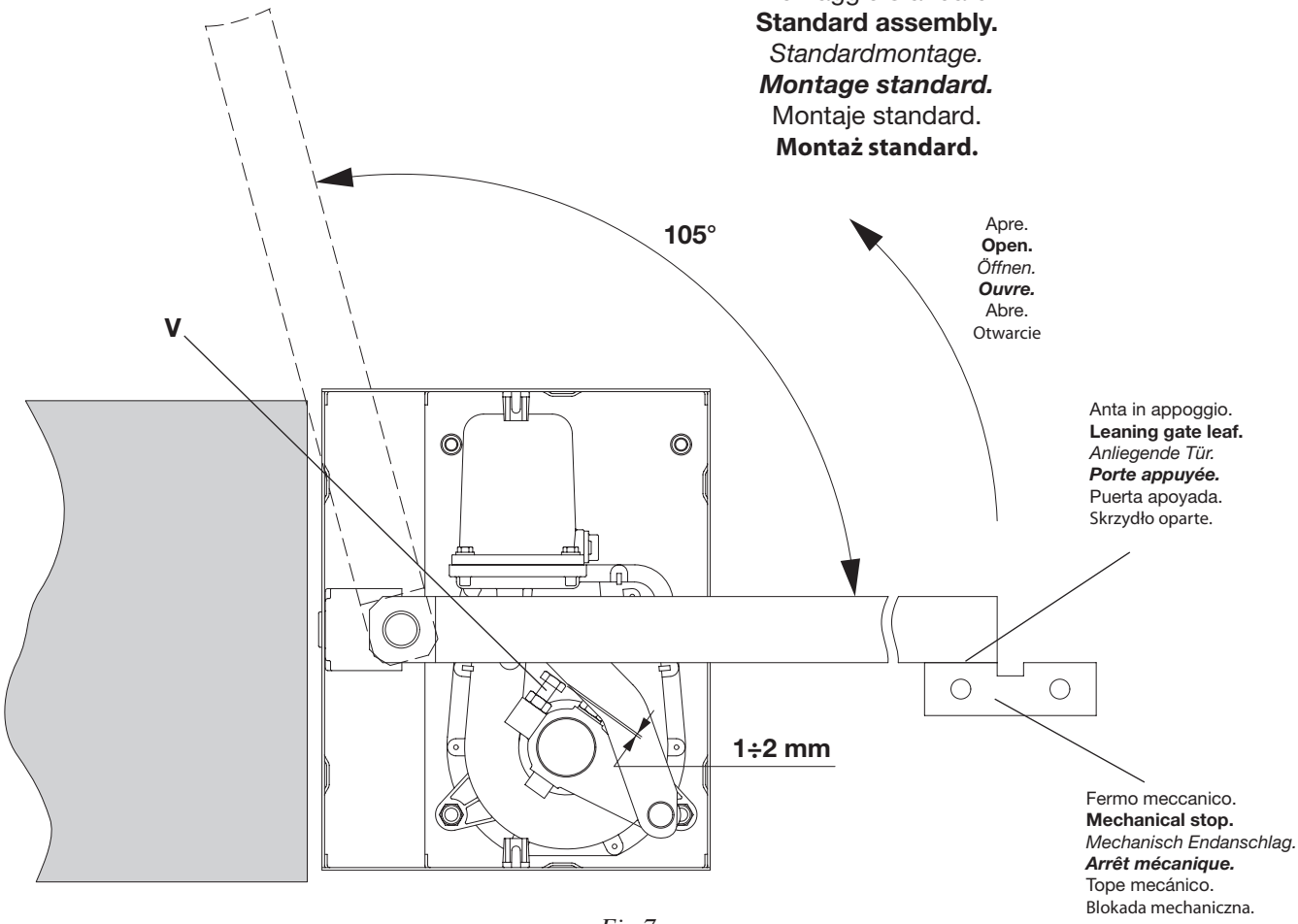

Fig.7

Montaggio interno.
Inside assembly.
Innere Montage.
Montage interne.
Montaje interno.
Montaż wnętrza.

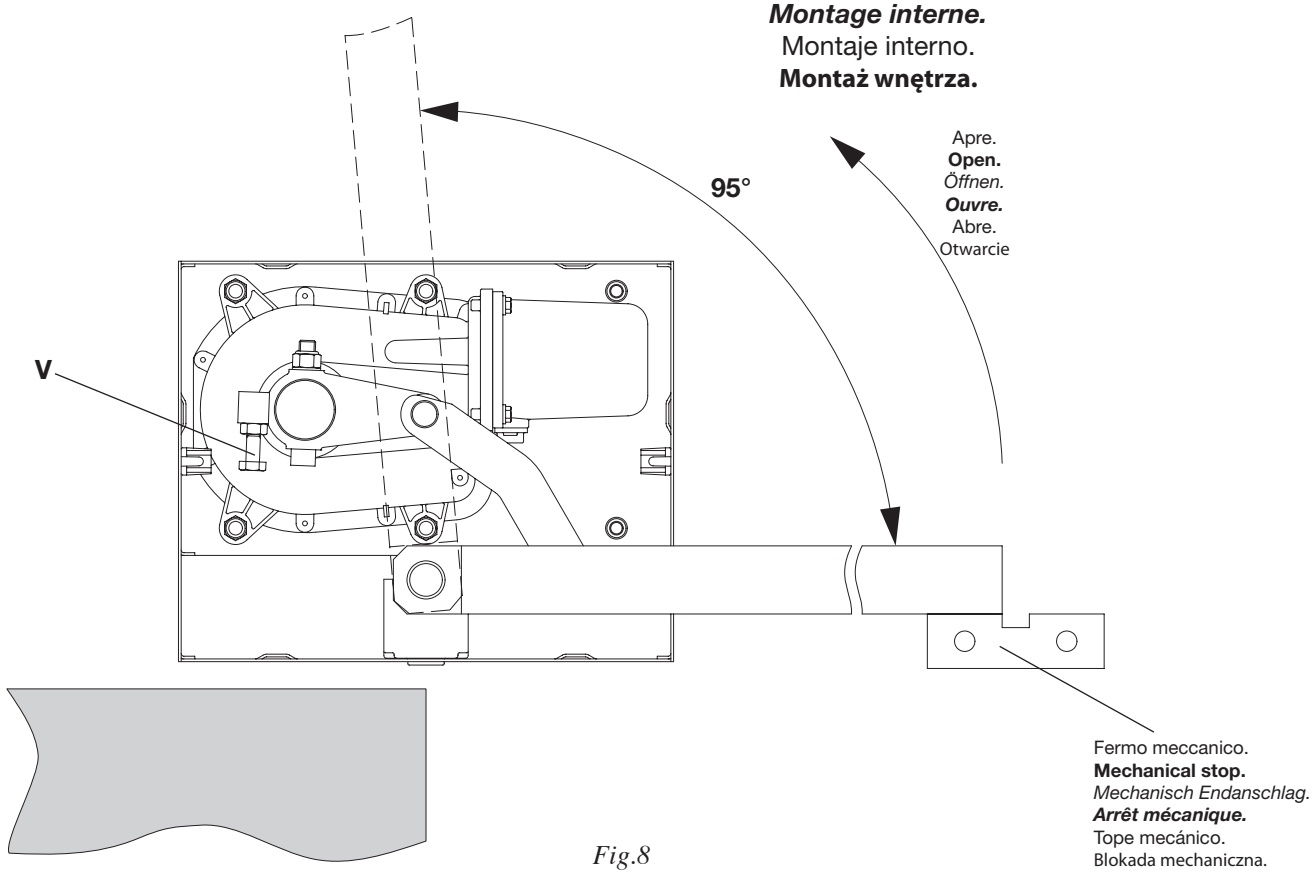

Fig.8

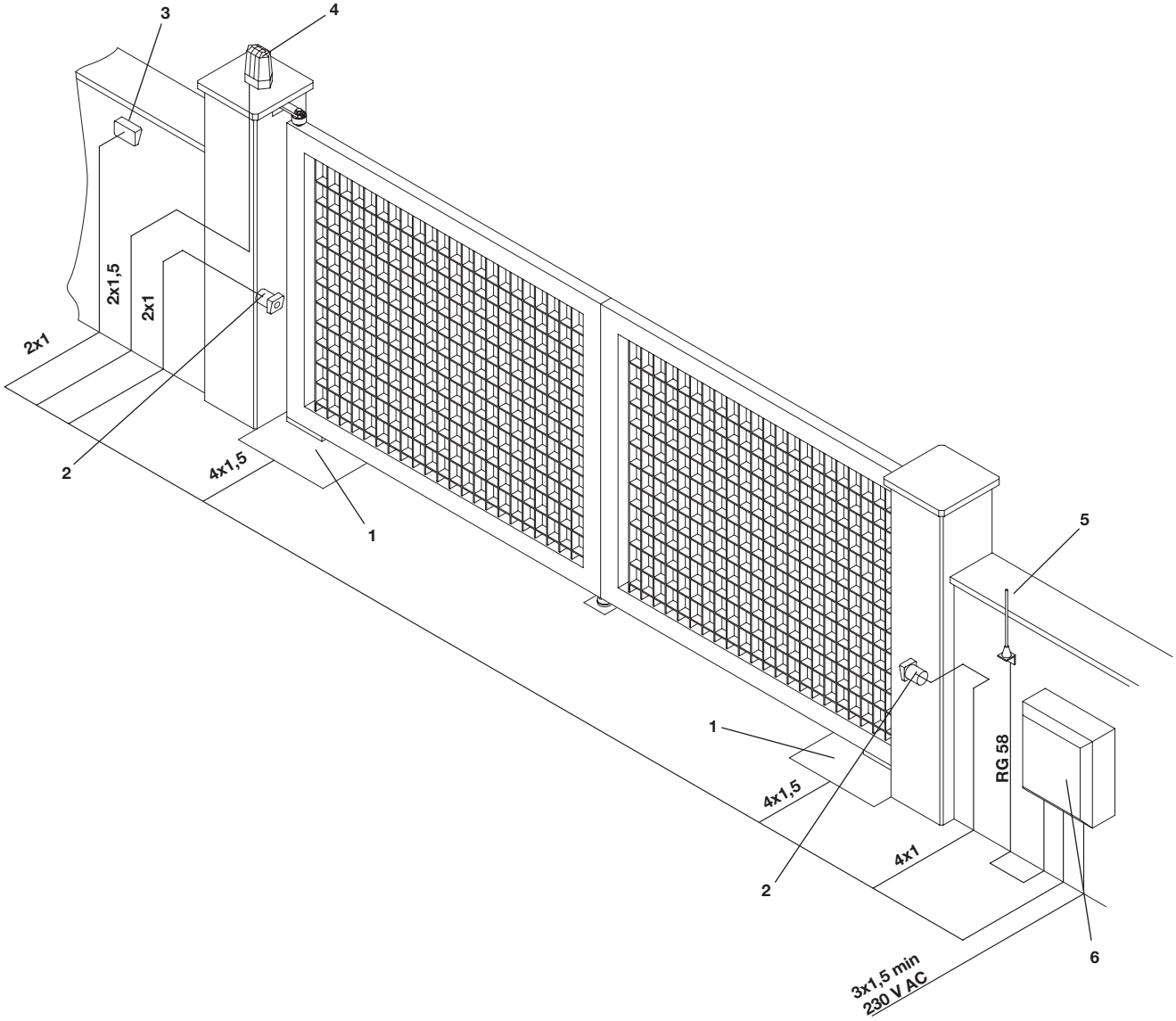

Legenda:
1 Motoriduttore DU.IT9N, cassa DU.CNI
2 Fotocellule SC.P30QI (da incasso), SC.P30QE (da esterno)
3 Selettore a chiave ID.SC o ID.SCE (da esterno) o tastiera digitale ID.PTD
4 Lampeggiante ID.LUX
5 Antenna LO.W1N o LO.W1LUX (quarzata)
6 Centrale elettronica DA.93AM

Legenda:
1 Motoreducer DU.IT9N, box DU.CNI
2 Photo-electric cells SC.P30QI (built in) SC.P30QE (external)
3 Key selector ID.SC or ID.SCE (external) or digital keyboard ID.PTD
4 Flash-light ID.LUX
5 Antenna LO.W1N or LO.W1LUX (quartz)
6 Electronic gearcase DA.93AM

Zeichenerklärung:
1 Getriebemotor DU.IT9N, Kasten DU.CNI
2 Fotozelle SC.P30QI (eingelegt), SC.P30QE (außenliegend)
3 Schlüssel-Selektor ID.SC oder ID.SCE (außenliegend) oder Digital-Tastatur ID.PTD
4 Blinker ID.LUX
5 Antennne LO.W1N oder LO.W1LUX (Quartz)
6 Elektroschrank DA.93AM

N.B.: Tenere separati i cavi di potenza da quelli ausiliari.
N.B.: The power cables must be kept separated from the auxiliary cables.
Wichtig: Leistungskabel von Hilfskabeln getrennt halten.
N.B.: Séparer les câbles de puissance des câbles auxiliaires.
N.B.: Tener separados los cables de potencia de los auxiliares.
Uwaga: Trzymać oddzielnie przewody zasilania od przewodów dodatkowych.

Légende:
1 Moteur-réducteur DU.IT9N, caisson DU.CNI
2 Photocellule SC.P30QI (encustiée) - SC.P30QE (suillée)
3 Selecteur à clé ID.SC ou ID.SCE (d'extérieur) ou clavier digital ID.PTD
4 Clignotant ID.LUX
5 Antenne LO.W1N ou LO.W1LUX (au quartz)
6 Centrale électronique DA.93AM

Leyenda:
1 Motorreductor DU.IT9N, caja DU.CNI
2 Fotocélula SC.P30QI (de empotrar), SC.P30QE (de superficie)
3 Selector a llave ID.SC o ID.SCE (de superficie) o teclado digital ID.PTD
4 Relampagueador ID.LUX
5 Antena LO.W1N o LO.W1LUX (cuarzada)
6 Central electrónica DA.93AM

Opis:
1 Siłownik DU.IT9N, obudowa DU.CNI
2 Fotokomórki SC.P30QI (do wbudowania), SC.P30QE (zewnętrzne)
3 Pilot kluczowy ID.SC lub ID.SCE (od zewnątrz) lub klawiatura z przyciskami ID.PTD
4 Światło migające ID.LUX
5 Antena LO.W1N lub LO.W1LUX (kwarcowana)
6 Centralka elektroniczna DA.93AM

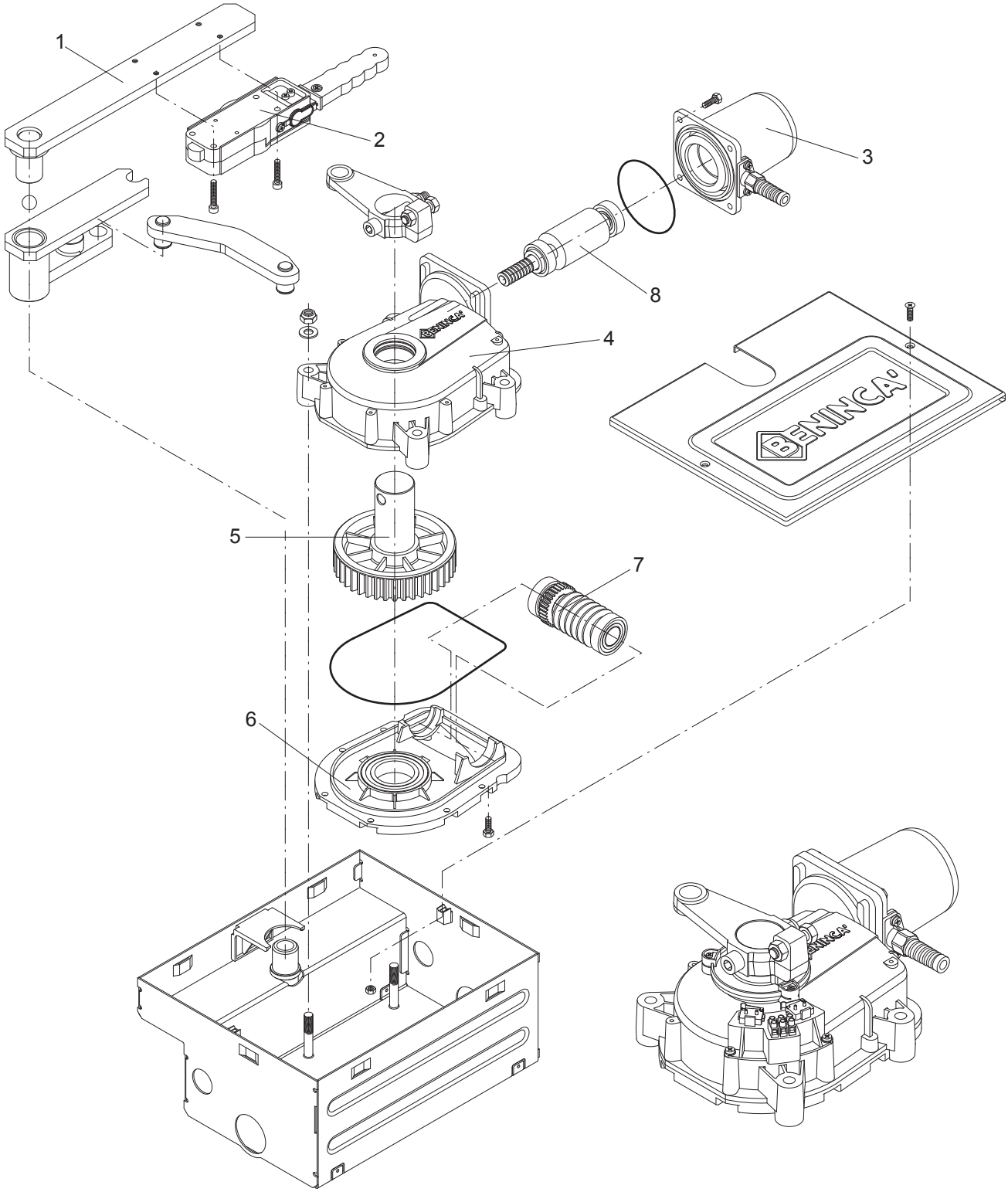

Pos.	Denominazione - Description - Bezeichnung - Dénomination - Denominación - Określenie						Cod.
1	Gruppo di traino	**Drive unit**	*Zugeinheit*	***Gr. d'entrainem.***	Gr. de tracción	**Wózek ciągnący**	9686319
2	Sblocco	**Release**	*Entblockung*	***Déblocage***	Desbloqueo	**Zespół odblok.**	9686282
3	Calotta motore	**Motor cup**	*Motor Deckel*	***Calotte moteur***	Estator	**Silnik**	9686289
4	Carter trasmis.	**Transm. guard**	*Gehäuse*	***Carter***	Caja transmis.	**Karter**	9686284
5	Ingranaggio	**Gear**	*Zahnrad*	***Engrenage***	Engranaje	**Koło zębate**	9686322
6	Coperchio	**Cover**	*Deckel*	***Couvercle***	Tapa	**Karter**	9686286
7	Vite senza fine	**Worm screw**	*Zahnrad*	***Vis sans fin***	Tornillo sin fin	**Śruba dwustronna**	9686287
8	Albero motore	**Motor shaft**	*Welle*	***Arbre moteur***	Eje motor	**Wał silnika**	9686288

Warning

- Before installing the automatic system read the instructions hereunder carefully.
- It is strictly forbidden to use the product DU.IT9N for applications other than indicated in this instruction handbook.
- Show the user how to use the automation system.
- Give the user the part of the leaflet which contains the instructions for users.
- All Benincá products are covered by an insurance policy for any possible damages to objects and persons caused by construction faults, under condition that the entire system be marked CE and only Benincá parts be used.

General information

For an efficient operation of these automatisms, the gate must have the following features:
- good stoutness and stiffness
- every wing must have one only hinge (if necessary, eliminate the others).
- all hinges must have positive clearances and permit smooth and regular manual operations.
- when wings are closed their height have to fit together.

Installation of the geared motor group

1 Assemble the cam ”B” as per Fig. 2 and firmly tighten the screw V (tightening torque 45 Nm max).

2 Fit the geared motor group to the casing with 4 of the 6 nuts supplied on the casing, according to the type of assembly (see Fig. 3) and with the self-tapping screws supplied.
N.B.: Before tightening the fixing screws of the geared motor check that there is no clearance between the 4 screws and the reduction gear surface. In the negative, provide shim as required.

3 Pre-assemble the manual release to the gate supporting iron bar, as shown in Fig. 4.

4 Weld the drive unit to the gate as shown in Fig. 5.

5 Position the gate wing in the special niche, making sure that the ball is positioned between the pivot of the foundation casing and the drive unit. Then link the drive unit to the motor connecting rod through the special link bar (Fig. 6).

Adjustment of the mechanical limit switches

Standard assembly (ref. fig. 3-7).
- Adjust screw V so that, when the gate leaf leans against the mechanical stop, about 1÷2 mm space is left.
- The opening limit switch is fixed and averts that the gates overcomes 105°. For smaller openings use a mechanical stop on the ground or the electromechanical group DU.FCN.

Inside assembly (ref. fig. 3-8).
- The closing limit switch is composed of either the mechanical stop on the ground or the electro-mechanical group DU.FCN.
- For the opening limit switch, regulate the screw V (95° max.). For greater openings use the group DU.IT180N.

Connections

Brown	motor gear and capacitor.
Light blue	common.
Black	motor gear and capacitor.

N.B.:For connections to the electronic gear case, please refer to instructions relative to the electronic gear case itself.

DU.IT9N

User's handbook

Safety rules

- Do not stand in the movement area of the gate.
- Do not let children play with controls and near the gate.
- Should operating faults occur, do not attempt to repair the fault but call a qualified technician.

Manual and emergency operation

Should a power failure or a break-down occur, the gate can be manually opened and closed as follows (refer to figure):

1 Remove the protection cap "T" of the gate lock which is pressure-inserted.
2 Insert the key "C" and turn it until rotation is no longer smooth.
3 Rotate the lever "L" in either direction until activation of the limit switch.

Now the gate can be manually operated.
To reset the automatic operation of the gate, move the lever "L" back to the original position, turn and extract the special key "CE" and replace the cap "T". The normal operation of the gate will be reset with the first movement of the gate.

Maintenance

- Every month check the good operation of the emergency manual release.
- It is mandatory not to carry out extraordinary maintenance or repairs as accidents may be caused. These operations must be carried out by qualified personnel only.
- The operator is maintenance free but it is necessary to check periodically if the safety devices and the other components of the automation system work properly. Wear and tear of some components could cause dangers.

Waste disposal

If the product must be dismantled, it must be disposed according to regulations in force regarding the differentiated waste disposal and the recycling of components (metals, plastics, electric cables, etc..). For this operation it is advisable to call your installer or a specialised company.

Warning

All Benincá products are covered by insurance policy for any possible damages to objects and persons caused by construction faults under condition that the entire system be marked CE and only Benincá parts be used.

Position for the automatic operation.

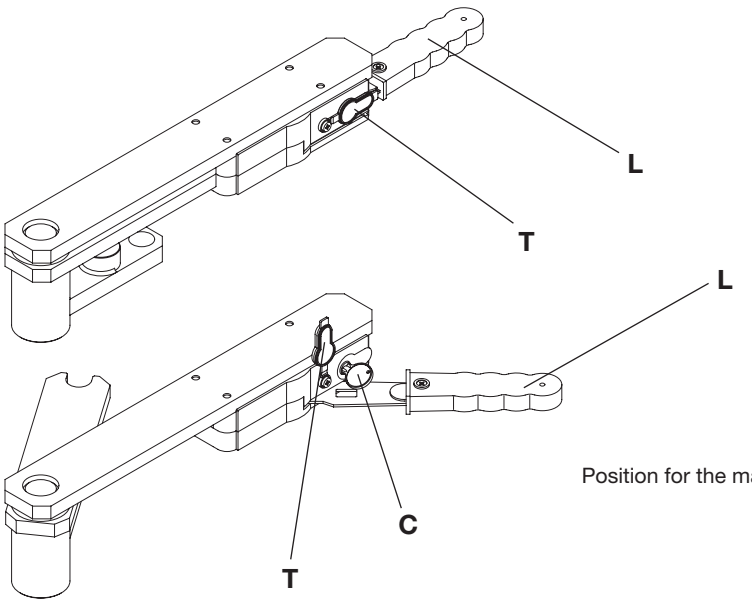

Position for the manual operation.

BENINCÀ®

AUTOMATISMI BENINCÀ SpA - Via Capitello, 45 - 36066 Sandrigo (VI) - Tel. 0444 751030 r.a. - Fax 0444 759728