L8542605
Rev. 07/00/01

BENINCA'®
AUTOMATISMI PER CANCELLI

CENTRALINA A MICROPROCESSORE
CONTROL UNIT WITH MICROCONTROLLER
MIKROCONTROLLER-STEUERUNG
CENTRALE A MICROCONTRÔLEUR
CENTRALITA A MICROPROCESADOR

DA.AX

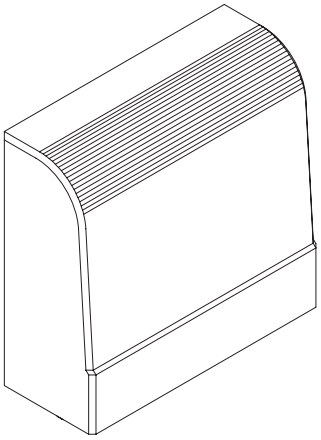

Libro istruzioni
Operating instructions
Betriebsanleitung
Livret d'instructions
Libro de instrucciones

UNIONE NAZIONALE COSTRUTTORI
AUTOMATISMI PER CANCELLI, PORTE,
SERRANDE ED AFFINI

Dichiarazione CE di conformità
EC declaration of confirmity
EG-Konformitatserklarung

Déclaration CE de conformité
Declaracion CE de conformidad

Con la presente dichiariamo che il nostro prodotto
We hereby declare that our product
Hiermit erklaren wir, dass unser Produkt
Nous déclarons par la présente que notre produit
Por la presente declaramos que nuestro producto

DA.AX

è conforme alle seguenti disposizioni pertinenti:
complies with the following relevant provisions:
folgenden einschlagigen Bestimmungen entspricht:
correspond aux dispositions pertinentes suivantes:
satisface las disposiciones pertinentes siguientes:

Direttiva sulla compatibilità elettromagnetica (89/336/CCE, 93/68/CEE)
EMC guidelines (89/336/EEC, 93/68/EEC)
EMV-Richtlinie (89/336/EWG, 93/68/EWG)
Directive EMV (89/336/CCE, 93/68/CEE) (Compatibilité électromagnétique)
Reglamento de compatibilidad electromagnética (89/336/MCE, 93/68/MCE)

Direttiva sulla bassa tensione (73/23/CEE, 93/68/CEE)
Low voltage guidelines (73/23/EEC, 93/68/EEC)
Tiefe Spannung Richtlinie (73/23/EWG, 93/68/EWG)
Directive bas voltage (73/23/CEE, 93/68/CEE)
Reglamento de bajo Voltaje (73/23/MCE, 93/68/MCE)

Norme armonizzate applicate in particolare:
Applied harmonized standards, in particular:
Angewendete harmonisierte Normen, insbesondere:
Normes harmonisée utilisées, notamment:
Normas armonizadas utilzadas particularmente:

EN 55022, EN 61000-3-2, EN 61000-3-3, EN 50082-1

Norme armonizzate applicate in particolare:
Applied harmonized standards, in particular:
Angewendete harmonisierte Normen, insbesondere:
Normes harmonisée utilisées, notamment:
Normas armonizadas utilzadas particularmente:

EN 60204-1, EN 60335-1

Norme e specifiche tecniche nazionali applicate in particolare:
Applied national technical standards and specifications, in particular:
Angewendete nationale Normen und technische Spezifikationen, insbesondere:
Normes et specifications techniques nationales qui ont été utilisées, notamment:
Normas y especificaciones técnicas nacionales que se utilizaron particularmente:

UNI 8612

Data/Firma

Data/Firma

BENINCA'®
AUTOMATISMI PER CANCELLI

Automatismi Benincà Srl
Via Scamozzi, 3
36030 MONTECCHIO P. VI
ITALIA

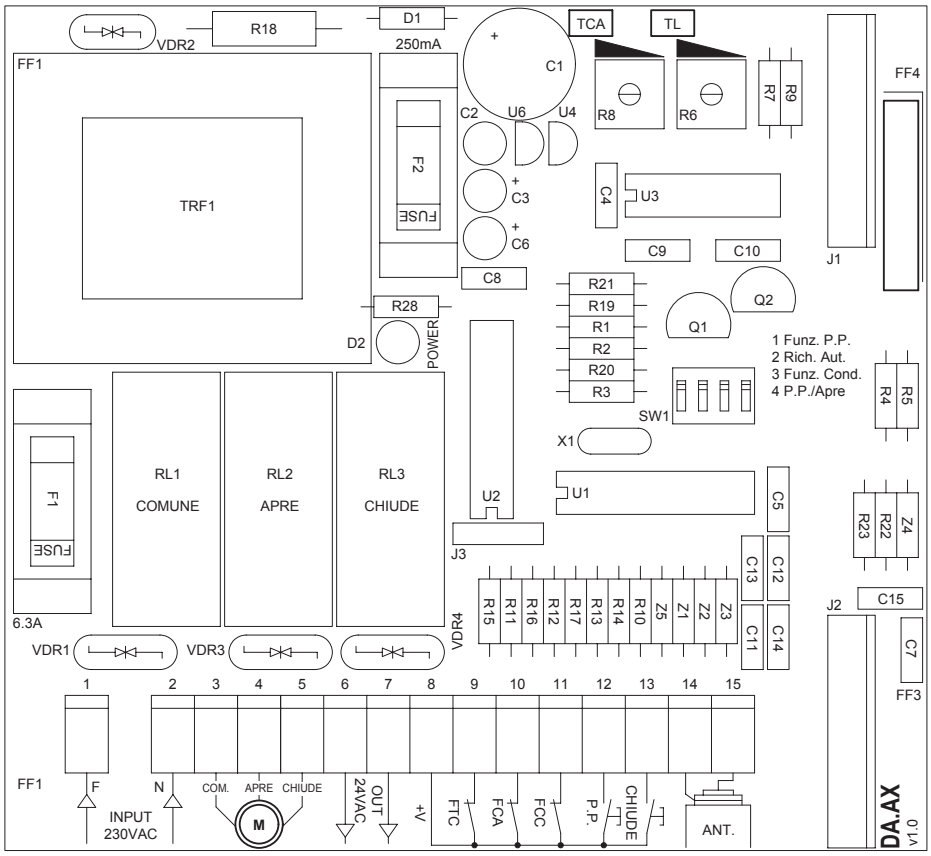
VDR2
R18
D1
250mA
C1
TCA
TL
FF1
TRF1
F2
FUSE
C2
U6
U4
R8
R6
R7
R9
FF4
C3
C6
C4
U3
C9
C10
J1
C8
R21
R19
R1
R2
R20
R3
Q2
Q1
R28
D2
POWER
1 Funz. P.P.
2 Rich. Aut.
3 Funz. Cond.
4 P.P./Apre
SW1
R4
R5
X1
F1
FUSE
RL1
COMUNE
RL2
APRE
RL3
CHIUDE
U2
U1
C5
J3
R23
R22
Z4
C13
C12
C15
6.3A
R15
R11
R16
R12
R17
R13
R14
R10
Z5
Z1
Z2
Z3
J2
C11
C14
C7
VDR4
VDR1
VDR3
FF3
1
2
3
4
5
6
7
8
9
10
11
12
13
14
15
FF1
F
N
COM.
APRE
CHIUDE
OUT 24VAC
+V
FTC
FCA
FCC
P.P.
CHIUDE
ANT.
INPUT 230VAC
M
DA.AX
V1.0

DA.AX Control unit with microcontroller

The microprocessor control unit "DA.AX" can be used with motors having a power not exceeding 500W.

Installation instructions.

a) **The electrical installation and functioning logic must comply with current standards.**

b) **It is advisable to keep the power cables (motor, power supply) detached from the control cables (push-buttons, photocells, radio). In order to avoid any possible interference it is recommended to provide for and use two separate sheaths (see EN 60204-1 15.1.3).**

c) **Before powering the unit, check again all connections which have been carried out.**

d) **Check the correct presettings of the Dip-Switches.**

e) **When the unit is powered, the LED "POWER" must be lit; in the negative, check fuses and that 230Vac 50Hz power supply is present between terminals 1 and 2 (INPUT 230VAC - keep to phase / neutral).**

f) **The N.C. inputs not used must be connected to the common "+V".**

g) **Should the direction of rotation of the motor be reversed, invert the motor wires "OPEN" with "CLOSE" and the limit switches wires "FCA" with "FCC".**

Input/Output functions

(1,2) **INPUT 230VAC= Control unit 230Vac 50 Hz power supply (respect phase/neutral wire position).**

(3,4,5) **COM/APRE/CHIUDE= Connection to the corresponding 230Vac 50 Hz motor terminals (the earth wire (green/yellow) must be connected to the motor housing).**

(6,7) **OUT 24VAC= 24Vac auxiliary power supply output (100mA max.).**

(12) **+V= Common connection to all the control inputs.**

(9) **FTC= Photocell receiver input (n.c. contact).**

(10) **FCA= Input of limit switch APRE (n.c. contact).**

(11) **FCC= Input of limit switch CHIUDE (n.c. contact).**

(8) **P.P.= Input, "PASSO-PASSO" push button or "APRE" push-button according to the Dip-Switch presetting**

(15) **CHIUDE= CLOSE button input (n.o. contact).**

(13,14) **ANT.= Input of radio board antenna**

Dip-switch functions

N.B.: **Every change of functions have to be done without electricity.**

DSW1= **This selects the type of functioning of the P.P. button and Remote control.**
Off= "APRE" - "STOP" - "CHIUDE" functioning
On= "APRE" - "CHIUDE" - "APRE" functioning.

DSW2= **This enables or disables the automatic re-closing - "TCA TRIMMER".**
Off= Automatic re-closing enabled
On= Automatic re-closing disabled

DSW3= **This enables or disables the apartment building function (after the first opening command, the P.P. button and the Remote control are deactivated).**

Off= Apartment building function disabled.
On= Apartment building function enabled.

DSW4= It selects the operation of the "P.P." input as push-button "PASSO-PASSO" or push-button "APRE".
Off= "P.P." push-button
On= "APRE" push-button

Trimmer functions

TCA= This allows the automatic re-closing time to be adjusted when this is enabled by positioning the DSW2 Dip-switch on OFF.
Adjustment can be from a minimum of 5 to a maximum of 150 seconds.
The minimum time is obtained by rotating the trimmer completely clockwise.

TL= This allows the working time of the automation to be adjusted. If the limit switches fail, the software protection will intervene after this time has elapsed. (Add about 4 sec. to the actual stroke time of the automation).
Adjustment can be from a minimum of 7 to a maximum of 180 seconds.
The minimum time is obtained by rotating the trimmer completely clockwise.

Note

- **The "STOP" control can be carried out by connecting the normally closed push button between the common wire of the limit switch and the "+V" terminal (see drawing).**

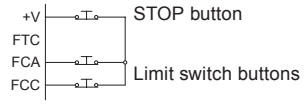

- **If the "P.P." input is used as "APRE" (Dip-switch 4= ON), the automatic closure is not carried out until the contact remains closed.**

AUTOMATISMI PER CANCELLI

AUTOMATISMI BENINCÀ Srl - Via Capitello, 45 - 36066 Sandrigo (VI) - Tel. 0444 751030 r.a. - Fax 0444 759728