PaxLock Pro – Installation and Commissioning Guide

Overview

When installing a PaxLock Pro it is important to ensure the environment the PaxLock Pro is to be installed in is fit for purpose.

This application note covers the preparation that should be carried out before, during and after installation to ensure the longevity of the PaxLock Pro as well as correct installation.

This application note also covers a few common problems which may impact the performance and quality of the PaxLock Pro

Checks to make prior to installation

Before installing the PaxLock Pro onto the door it is important to check that the door, frame and any relevant door furniture are in good working order. This is important to ensure both the longevity and smooth operation of the PaxLock Pro once installed.

Through door holes

The PaxLock Pro has been designed to work with locksets that are either European (DIN 18251-1) or Scandinavian profile as shown in Figure 1.

The through door holes must be **8mm** diameter and the central follower must have at least **20mm** clearance around it.

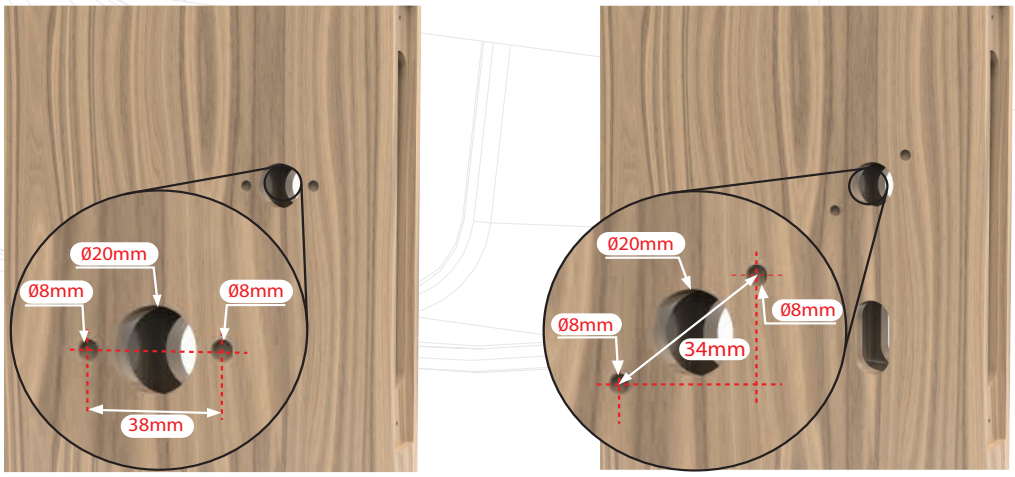

Figure 1 – European drilling holes (left) & Scandinavian drilling holes (right)

Lockset

It is recommended that the PaxLock Pro is installed with a new lockcase to ensure the smooth operation of the PaxLock Pro.
If an existing lock set is being used it must meet the following specifications:

- DIN 18251-1 certified for European locksets
- Backset of ≥55mm
- Centres measurement of ≥70mm if using key override for European style locksets
- Centres measurement of ≥105mm if using key override for Scandinavian style locksets
- Turning angle of ≤45°

The lockset must be both horizontally and vertically aligned to the door as shown in figure 2.

The use of a lockset with key override is recommended to ensure access can be gained in the rare event of a unit failure.

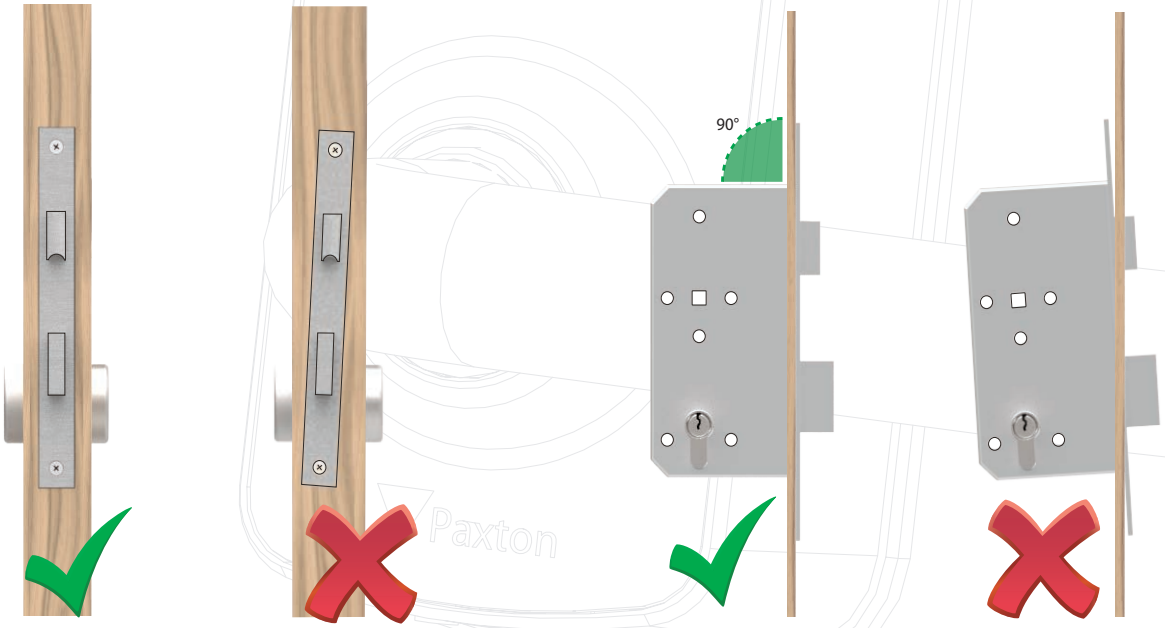

Figure 2

Door Frame

It is best practice to ensure there is a gap of ≤3mm from the door edge to the frame. This is to ensure that if an anti-cord plunger is present on the lock case, it can function correctly.

The door keep should also be ≤15mm to avoid clashing with the PaxLock Pro when the door is closed.

Door usage

The PaxLock Pro is recommended for use on doors being operated up to 75 times per day. For usage above this number we would recommend a Paxton hard wired solution.

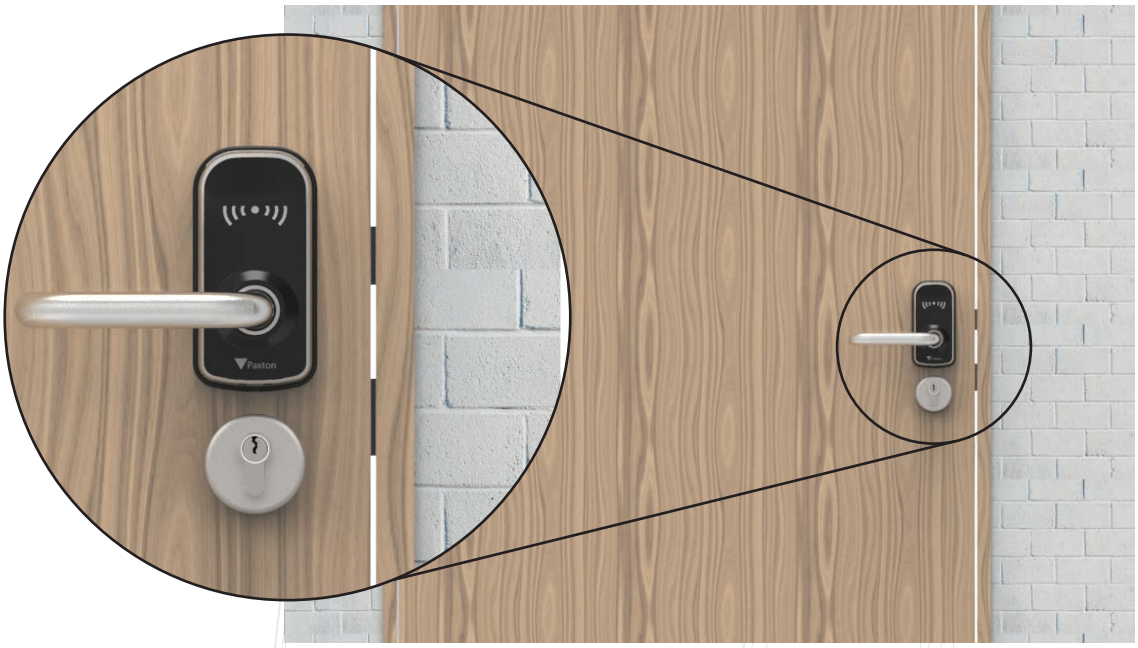

Figure 3

Floor

The distance between the bottom of the door and the floor must be sufficient to allow the door to freely open and close without rubbing on the floor.

Door Closer

If a door closer is being used it must be adjusted to ensure the door closes without slamming but does not require excessive force to open.

Door Stop

The use of a door stop is advised on doors that can hit an adjacent wall when fully opened. This will prevent damage being caused to the PaxLock Pro.

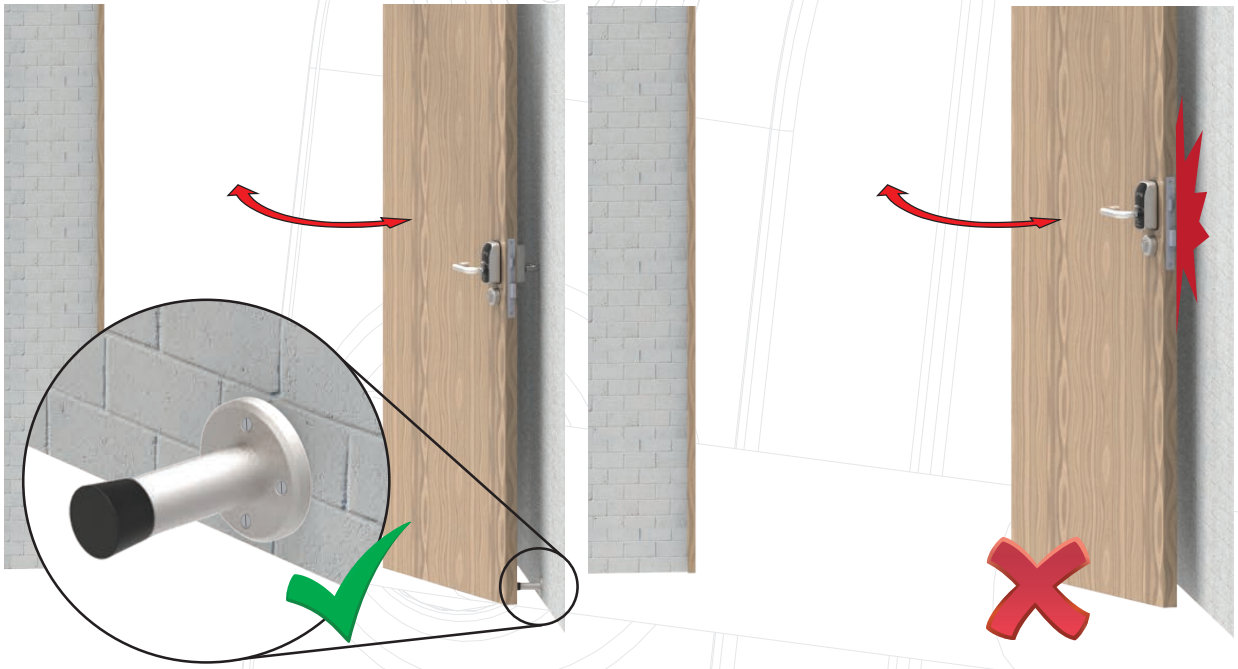

Acoustic and draft seals

Should a door have either an acoustic or draft seal around the outer edge it is important that the door can still easily close without putting undue stress on the latch and strike plate. If this is not the case the strike plate may need adjusting.

Metal doors

The PaxLock Pro is suitable for installation onto metal doors providing both the width and lockset are within the specifications outlined on the PaxLock Pro datasheet. To ensure correct operation the following must be checked:

- If using in online mode, the Net2Air bridge or Paxton10 Wireless Connector may have to be positioned well within the 15m of range as a metal door will reduce the range of communication. To ensure reliable operation, standalone mode may be more appropriate.
- The anti-rotation tee nut should be replaced with an equivalent M4, self-tapping pan head screw suitable for installation into metal (not supplied).

Ordering the right kit

Once you are happy the site is suitable for the PaxLock Pro you will need to ensure you have the right information to order the correct products.

There are 4 sales codes to choose from depending on whether you want an internal or external PaxLock Pro in either black or white.

When choosing the external version, it is important to note that only the external side of the lockset is IP rated, meaning the PaxLock Pro should never be installed externally where the whole unit is exposed to the elements.

Door Widths

Notes will need to be taken on the door thicknesses across a potential site, this information will be required when ordering the PaxLock Pro.

- Out of the box the PaxLock Pro will work with **40-44mm** door widths.
- Before installing a PaxLock Pro on a unit that is **35-37mm**, both the spindle and through door bolts will need to be cut down to the correct length as per the drilling template.
- For door widths of **50-54mm** or **57-62mm**, a separate Wide Door kit will need to be purchased.

Cover plates

If a slimline electronic door handle is being replaced with the PaxLock Pro, cover plates are available to cover any unused holes in the door. The cover plates can be fitted over the top of the PaxLock Pro and secured with 4 supplied wood screws; one in each corner.

The appropriate cover plate will need to be ordered depending on whether a key override is present and matched to the centre measurement of the lockset.

Also see: Cover plates dimensional drawing < paxton.info/3560 >

BS EN179 – Emergency Exit devices for use on escape routes

BS EN179 is a standard for devices to be used in emergency situations where people are familiar with the emergency exit and its hardware, therefore a panic situation is unlikely to develop. This means lever handle operated escape mortice locks or push pads may be used.

The PaxLock Pro is certified to the BS EN179 standard meaning the product is suitable for use on emergency exits in areas where a panic situation is unlikely to develop.

The PaxLock Pro must be used with the PaxLock Pro - Euro, EN179 kit or the door system will not be compliant to BS EN179.

Sales Code: 901-015 PaxLock Pro - Euro, EN179 kit

You can view the PaxLock Pro's BS EN179 certification at the following links < paxton.info/3689 > < paxton.info/6776 >

Fire Doors

The PaxLock Pro is certified to EN 1634-1 covering both FD30 and FD60 rated timber fire doors. All door furniture used in the installation must have equivalent fire certification in order to comply. This includes the use of interdens as recommended by the lockset manufacturer.

During installation

EN179 Kit

The Union HD72 lock case is designed so that the front and rear of the lock case work independently of each other, allowing for single action egress. For this reason, a split spindle must be used with the lock case. The split spindle may need to be cut down, depending on the door width, there are marks on the split spindle to aid in cutting it down.

Note: When cutting down the split spindle we recommend a hack saw with 24 TPI (teeth per inch)

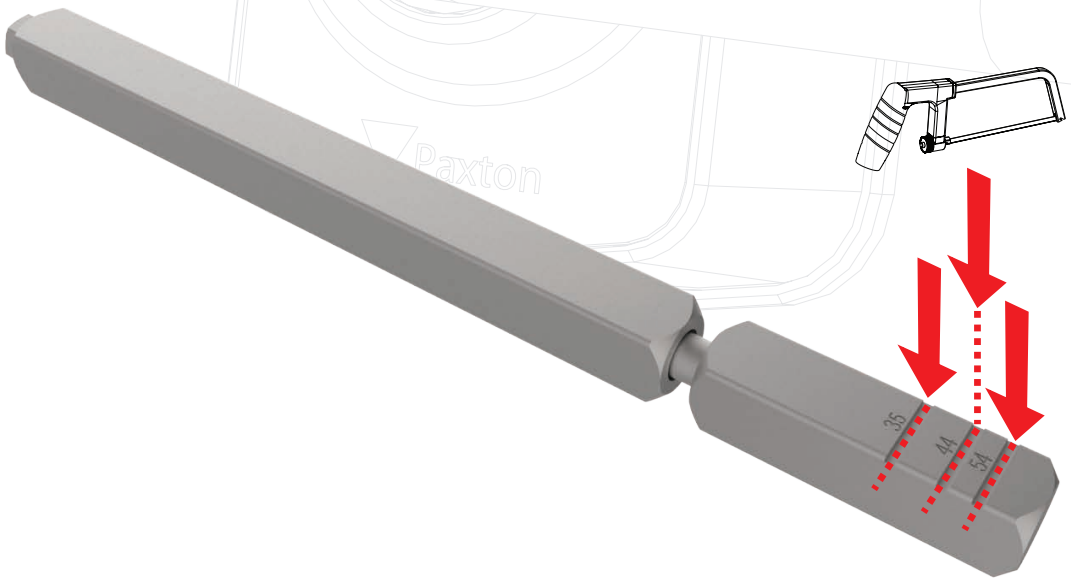

It is important to note that when installing the Union HD72 lock case the screws on the follower must always be located on the inside of door as this denotes the direction of escape. If they need to be moved over to the other side of the lock case, they must be removed and replaced one at a time.

Note: If both screws are removed at the same time you will be unable to screw them back in.

PaxLock Pro Installation

The supplied template < Paxton.info/3585 > should be used to check that the holes in the door are in the right location and correctly sized for the PaxLock Pro.

To ensure the PaxLock Pro is perpendicular to the door edge it is important to mark and drill the anti-rotation screw in the correct location, as indicated below.

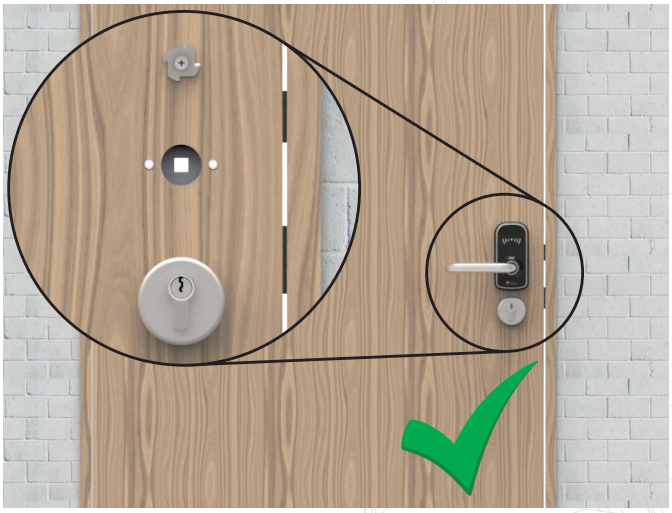

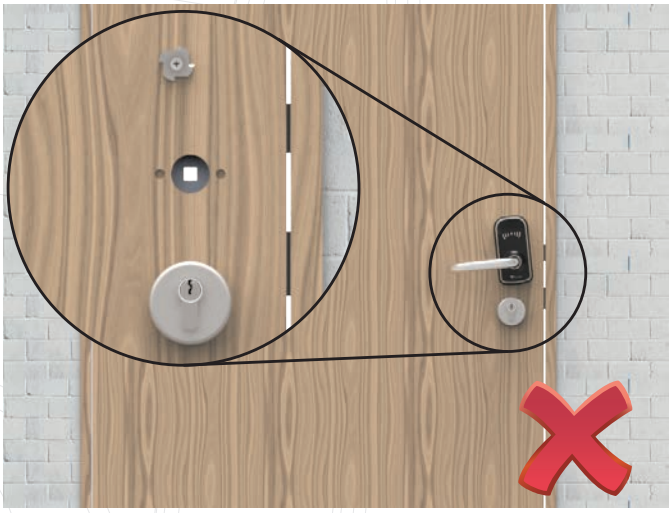

When passing the PaxLock Pro through the door to fit it, the unit must sit completely flush against the face of the door. If this is not the case the holes in the door may need adjusting.

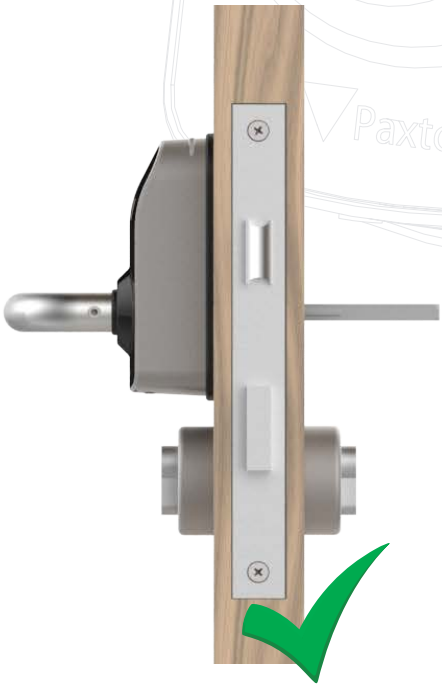

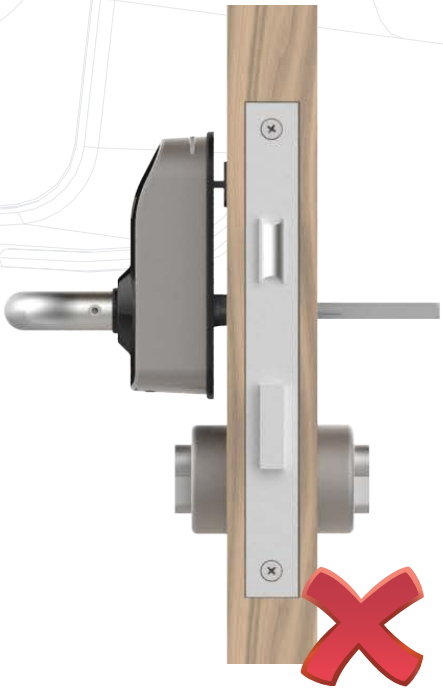

After terminating the power and data cables it is important to tuck the cables behind the PCB in the centre of the device, as indicated below

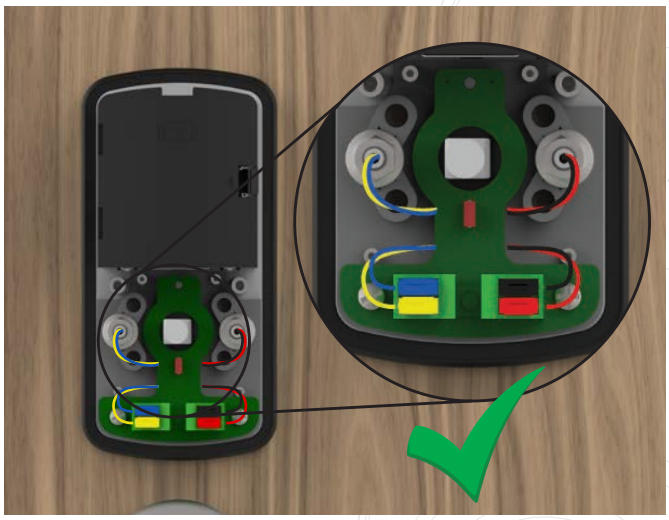

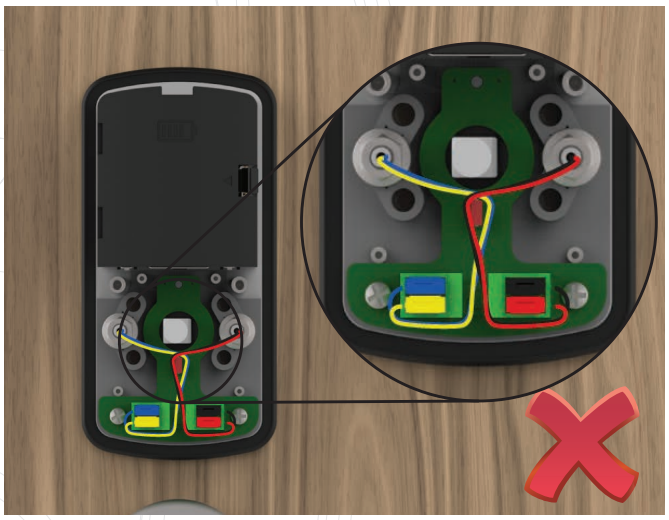

Post installation commissioning

Once the PaxLock Pro has been installed there are several checks that can be made to ensure the PaxLock Pro has been installed and is functioning correctly.

When the PaxLock Pro is first powered up it will remain in an unlocked state. This will give you the chance to check the following;

1. Does the latch fully retract when depressing the handle?
2. Does the door open smoothly without rubbing on the frame, latch or floor?
3. When letting go of the handle does the latch fully return to its natural position?
4. Is it smooth and easy to open the door?
5. When closing the door does the latch sit within the keep?
6. When the door is closed does the deadbolt (if present) project smoothly into the keep?

If the answer is yes to all the above, then the unit can be bound to a Net2 or Paxton10 system, or a standalone pack can be enrolled. If the answer is no, refer to the troubleshooting guide below.

Replacing the Batteries

To replace the batteries of the PaxLock Pro:

1. Carefully insert a terminal screwdriver into the slot at the bottom of the battery side fascia and angle downwards to pop off the fascia
2. Open the battery case lid
3. Replace the 4 AA batteries inside and close the battery case lid
4. Place the rear fascia back over the handle and secure to the chassis, inserting it at the top first and then pushing on the bottom, until you hear a click

Cleaning

Use a soft, slightly damp cloth to clean, and avoid harsh or abrasive chemicals that could damage the finish.

Troubleshooting

To help improve the quality of the installation and the longevity of the product several common issues and potential solutions are listed below.

Problem	Recommendation
Lockset	
Lockcase is old, worn or not freely moving	Applying a silicone-based lubricant may improve this operation. If not, a replacement lockcase is recommended. A broken or worn lock case could cause permanent damage to the PaxLock Pro which would not be covered under the warranty.
The latch bolt is not fully retracting when the handle is fully depressed?	The turning angle of the lock case must be 45° or lower for the PaxLock Pro to fully retract the latch. If it is over this, the lockcase will need replacing.
When the door is closed the latch does not sit in the keep	The position of the keep and strike plate should be adjusted so that the latch sits comfortably in the keep when the door is closed. Failure to do this compromises the security of the door.
The lock cases will not retract the latch when the door is closed, even from the secure side of the door.	Check the distance from edge of door to frame is no more than 3mm. Failure to do this can in some cases can cause lock case issues or compromise the security of the door.

PaxLock Pro	
The edge of the PaxLock Pro or handle is clipping the door frame when opening and closing the door.	If this occurs, it may be a result of the backset on the lock case being too low. We recommend a minimum measurement of 55mm to be suitable for most doors. The lockcase will need replacing with one with an increased backset measurement if this is the case.
The PaxLock Pro will not sit flush against the door when fitting.	The through door holes must be 8mm diameter and the central follower must have at least 20mm clearance around it. If this is not the case it will need correcting before installing the PaxLock Pro.
The PaxLock Pro is not responding when I present a token	Make sure the secure side chassis is fitted. This is required for the PaxLock Pro to function.
The through door cables have sheered when fitting the chassis.	This may be because the door is too narrow for the bolts that have been used. Refer to the template for the correct bolt and spindles sizes for each door thickness.
There is free play in the handles.	It is important the grub screws on both handles are fully tightened to remove any free play.
Door Furniture	
The door rubs against the frame/floor when opened.	The door or frame may need shaving down to ensure smooth operation.
The door is hitting the wall when opened.	It is important that a door stop is installed to prevent the handle hitting a wall or object when the door is opened fully. Failure to do this can damage the PaxLock Pro when swung open.
Door seals installed post install are applying too much pressure to the latch and deadbolt.	Door seals must be routed into the frame to prevent excessive force on the latch when the door is closed. The keep and strike plate may need to be moved if seals have been fitted without routing.
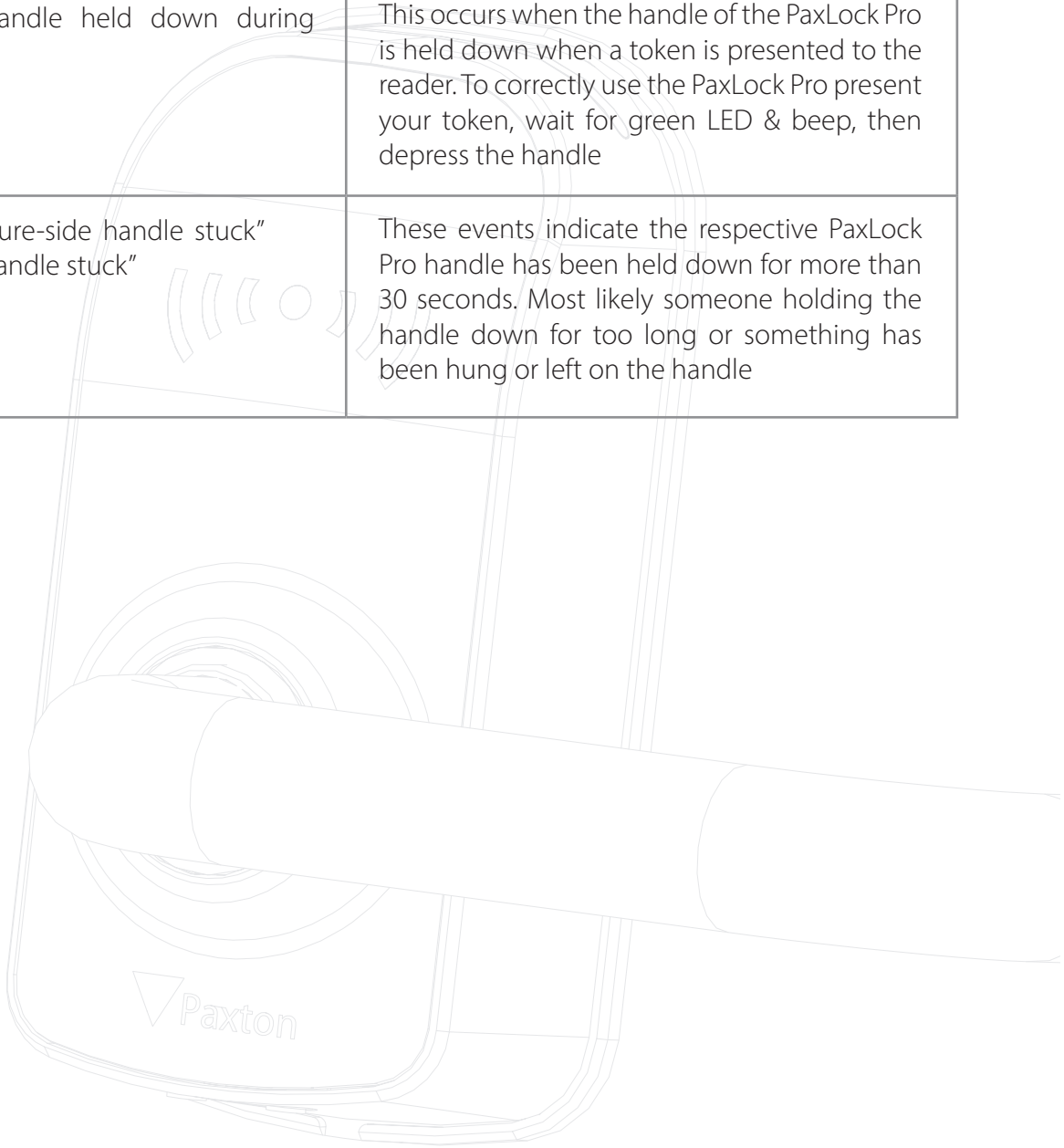
Net2	
Event in Net2: "Handle held down during operation	This occurs when the handle of the PaxLock Pro is held down when a token is presented to the reader. To correctly use the PaxLock Pro present your token, wait for green LED & beep, then depress the handle
Event in Net2: "Secure-side handle stuck" or "Unsecure-side handle stuck"	These events indicate the respective PaxLock Pro handle has been held down for more than 30 seconds. Most likely someone holding the handle down for too long or something has been hung or left on the handle