FADINI®
l'apricancello
Made in Italy

I

LIBRETTO DI ISTRUZIONI

Elpro ·220 TRIFASE

PER AUTOMAZIONI TRIFASE
SU CANCELLI SCORREVOLI,
A PROGRAMMAZIONE DIGITALE

- AUTOAPPRENDIMENTO DEL TEMPO DI LAVORO
- ACCELERAZIONE GRADUALE E RALLENTAMENTO IN FRENATA
- FUNZIONE PASSO PASSO
- UOMO PRESENTE
- DISPLAY DI SEGNALAZIONE
- REGOLAZIONE DELLA VELOCITÀ
- PASSAGGIO PEDONALE

pag. 1,2,4,5,6,7,8

GB

INSTRUCTIONS

Elpro ·220 THREE-PHASE

TO SUIT TRHEE-PHASE
AUTOMATIONS FOR SLIDING GATES
DIGITAL PROGRAMMING LOGIC

- MOTOR RUNTIME AUTOLEARNING
- GRADUAL ACCELERATION AND BRAKING SLOWDOWN
- STEP BY STEP OPERATIONS
- DEADMAN CONTROL
- GATE STATUS INDICATION BY DISPLAY
- SPEED ADJUSTMENT
- PEDESTRIAN MODE

page 1,2,9,10,11,12,13

F

MANUEL D'INSTRUCTION

Elpro ·220 TRIPHASE

POUR AUTOMATIONS
TRIPHASEES SUR PORTAILS COULISSANTS,
A PROGRAMMATION DIGITALE

- AUTOAPPRENTISSAGE DU TEMPS DE TRAVAIL
- ACCELERATION GRADUELLE ET RALENTISSEMENT EN FREINAGE
- FONCTION PAS-PAS
- HOMME MORT
- DISPLAY DE SIGNALISATION DE L'ETAT DE L'AUTOMATION
- REGLAGE DE LA VITESSE
- PASSAGE PIETONS

page 1,2,14,15,16,17,18

D

BETRIEBSANLEITUNG

Elpro ·220 DREIPHASIG

FÜR DREIPHASIGE AUTOMATIONEN
AUF SCHIEBETOREN MIT
DIGITALER PROGRAMMIERUNG

- SELBSTEINLERNUNG DER LAUFZEITEN
- GRADUELLE BESCHLEUNIGUNG UND ENDLAGENDÄMPFUNG
- IMPULSBETRIEB
- TOTMANN-BETRIEB
- DISPLAY ZUR SIGNALISIERUNG DES ZUSTANDS DER AUTOMATION
- GESCHWINDIGKEITSEINSTELLUNG
- GEHTÜRFUNKTION

Seite 1,3,19,20,21,22,23

E

MANUAL DE INSTRUCCIONES

Elpro ·220 TRIFASE

PARA AUTOMACIONES TRIFÁSICAS
DE VERJAS CORREDIZAS CON
PROGRAMACIÓN DIGITAL

- AUTOAPRENDIZAJE DEL TIEMPO DE TRABAJO
- ACELERACIÓN GRADUAL Y DESACELERACIÓN EN FRENADA
- FUNCIÓN PASO-PASO
- HOMBRE PRESENTE
- PANTALLA DE SEÑALIZACIÓN ESTADO DE LA AUTOMACIÓN
- REGULACION DE LA VELOCIDAD
- PASO DE PEATONES

pág. 1,3,24,25,26,27,28

NL

HANDLEIDING

Elpro ·220 DRIEFASE

VOOR DRIEFASENAUTOMATISERINGEN
OP SCHUIFHEKKEN, MET
DIGITALE PROGRAMMERING

- SELF-LEARNING VAN DE WERKTIJD
- GELEIDELIJKE ACCELERATIE EN VERTRAGING TIJDENS REMWERKING
- STAP-VOOR-STAP FUNCTIE
- DODEMANSFUNCTIE
- DISPLAY VOOR SIGNALERING VAN DE TOESTAND VAN DE AUTOMATISERING
- SNELHEIDSREGELING
- VOETGANGERSMODUS

pag. 1,3,29,30,31,32,33

Dis. N. 4534

meccanica FADINI® s.n.c.
Via Mantova, 177/A - C.P. 126 - 37053 Cerea (Verona) Italy - Tel. +39 0442 330422 r.a.
Fax +39 0442 331054 - e-mail: info@fadini.net - www.fadini.net

CE

FADINI®
l'apricancello
Made in Italy

I

Schermata 15
Codici di programmazione

Schermata 14
Schermata di visualizzazione

Schermata 13
Passaggio pedonale

Schermata 12
Impostazione velocità

Schermata 11
Fotocellule 2ª coppia
(morsetti 25 e 26)

Schermata 10
Regolazione Forza
alla velocità di lavoro

Schermata 9
Regolazione Forza
a bassa velocità

Schermata 8
Fotocellule 1ª coppia
(morsetti 1 e 2)

Schermata 7
Tempo di pausa in
modalità Automatico

Schermata 6
Funzione Radio

Schermata 5
Funzione Automatico-
Semiautomatico -
Uomo Presente

Schermata 4
Stato dell'automazione

Schermata 4.1
Memorizzazione corsa cancello

Accensione

Schermata 1
Selezionare la lingua

Schermata 2
Stato delle Sicurezze

Schermata 3
Stato dell'impianto

GB

Screen 15
Programming code

Screen 14
Visualization display

Screen 13
Pedestrian mode

Screen 12
Speed setting

Screen 11
Photocells 2nd pair
(terminals 25 and 26)

Screen 10
Torque adjustment with
operating speed rating

Screen 9
Torque adjustment
with low speed:

Screen 8
Photocells 1st pair
(terminals 1 and 2)

Screen 7
Pause time on
automatic mode

Screen 6
Radio function

Screen 5
Function Automatic-
Semiautomatic -
Deadman control

Screen 4
Status of the automation

Screen 4.1
Memorizing the gate travel

Starting

Screen 1
Select the language

Screen 2
Safety Status

Screen 3
Status of the system

F

Page-écran 15
Code de programmation

Page-écran 14
Ecran de visualisation

Page-écran 13
Passage piétons

Page-écran 12
Réglage vitesse

Page-écran 11
Photocellules n°2
(bornes 25 et 26)

Page-écran 10
Régulation Force
à la vitesse de travail

Page-écran 9
Régulation Force
à basse vitesse

Page-écran 8
Photocellules 1° couple
(bornes 1 et 2)

Page-écran 7
Temps de pause en
modalité Automatique

Page-écran 6
Fonction Radio

Page-écran 5
Fonction Automatique-
Semiautomatique -
Homme Mort

Page-écran 4
État de l'automation

Page-écran 4.1
Mémorisation de la course du portail

Allumage

Page-écran 1
Sélectionner la langue

Page-écran 2
Conditions de sûreté

Page-écran 3
Conditions de l'installation

Dis. N. 4534

CE

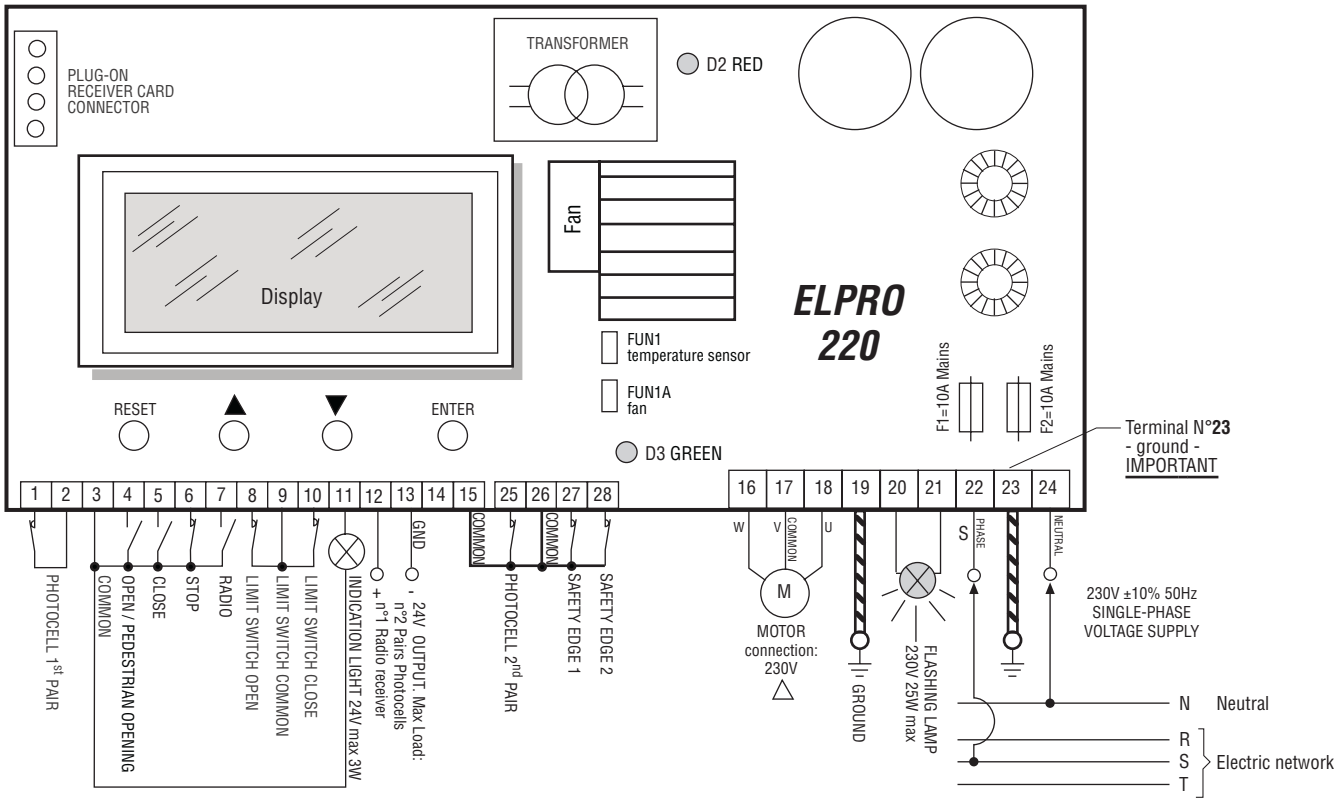

Description: The electronic control panel Elpro 220 is an electronic unit with microprocessor for motors up to 3,0 HP (2,2KW) three-phase, installed on big sliding gates. Power supply is of 230V 50Hz±10% single-phase. Elpro 220 controls three-phase motors 220V delta connection, or single-phase motors without condenser. A display allows programming of the main function as required and real time visualising: braking with motor slowdown, motor gradual starting, gate limit travel learning, torque control on lower speed setting on braking and starting phases, operator torque control adjustment. It is built in full compliance with the Low Voltage Safety Norms 2006/95 CE and Electro-Magnetic Compatibility 2004/108/EEC - 92/31/EEC. Fitting operations are recommended to be carried out by a qualified technician in conformity to the existing safety standards. The manufacturing company declines any responsability for incorrect handling and applications; also, it reserves the right to change these instructions or update the control panel any time. **Failure to observe the installation instructions may cause serious damages to properties and persons.**

IMPORTANT:

- **The control unit is to be fitted in a sheltered place inside a suitable enclosure**
- **Fit the mains to the control panel with a 0.03A high performance magnetic-thermal circuit breaker**
- **Verify that the power supply to the electronic control panel is 230V ±10% 50Hz**
- **For power supply to the electric motor 230V ±10% 50Hz use 2.5 mm² section wires to 50 m distances and set the motor terminal board for 230V power supply**
- **Power supply, Flashing lamp use cables with 1,5 mm² section wires up to 50m of distance; for limit switches and accessories use cables with 1mm² section wires**
- **If photocells are not used bridge terminals 1 and 2, 25 and 26, 27 and 28 with 26**
- **If no key or button-operated switch is used bridge terminals 3 and 6**
- **To use shielded cables for the motor connection and to earth system by using terminal 19.**

ATTENTION:

- **Once power to the control panel is interrupted, wait until the condensers are discharged: D2 led must go off**
- **The control panel is factory pre-set on "AUTOMATIC" mode**
- **For the 24V direct current low voltage connections, respect strictly + and - symbols**
- **The system can work only if the ground terminals 19 and 23 are properly connected**
- **When power is set back after a power failure, the automation carries out motions at slow down speed until a limit switch is reached. But all the previously selected modes stay in the memory.**

In case of failure of operation:

- Verify that the power supply to the electronic unit is 230V ±10%
- Verify that the power supply to the Electric motor is 230V ±10%
- For distances over 50 meters increase the wire section.
- Verify the fuses
- Verify that the Photocells are in closed contact setting
- Verify all the closed contacts NC: Stop and Safety Edges
- Verify that there is no voltage drop between control panel and electric motor
- Verify to have connected the earth ground terminals 19 and 23
- Verify that the Motor and its terminal board are connected to work at 230V
- Verify that low speed and operator torque settings are adapted to the weight of the gate.

Fault Ditection Led:

D2 = Normally on, card under voltage
D3 = Normally on green, 24V supplied

Important:
- **Make sure that the three plates of the electric motor header are positioned in parallel.**
- **Before going on with all the electrical connections, make sure to properly ground the PCB (terminals No.19 and No.23) and the metallic plate.**

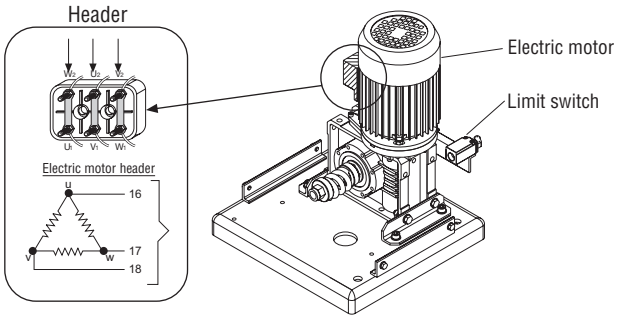

BUTTON FUNCTIONS

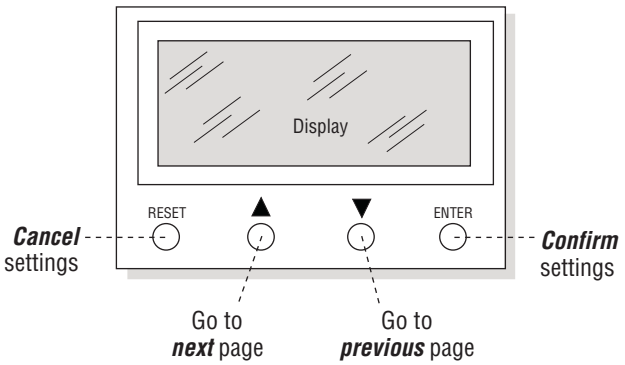

STARTING

IMPORTANT: It is advised to begin with the gate completely closed in order to shorten the times for gate travel autolearning.
Supplied the unit with 230V 50Hz ±10% it's possible to see the status of the sliding automation on the display:
- **Frequency and speed are on zero**
- **Closed Gate** (the closing limit switch is engaged)

SCREEN 1 — Select the language

When the card is under voltage, after the first screen where the working program is indicated, appears the screen for language selection:
Button **ENTER** to enter in the selection of the language function

Button ▲ selects the language. Button **ENTER** confirms the selected language

DISPLAY

language select!
ENGLISH ENG

RESET △ ▼ ENTER

SCREEN 2 — Safety Status

ph 1= 1°photocell terminals1-2 = zero Ø (=1 presence of an obstacle)
ph 2= 2° photocell terminals 25-26 = zero Ø (=1 presence of an obstacle)
Cs1= Safety rubber strip 1 on opening = zero Ø (=1 presence of an obstacle)
Cs2= Safety rubber strip 2 on closing = zero Ø (=1 presence of an obstacle)
Safety strips reverse gate travel in case of an obstacle, the gate stops and waits for a new command

DISPLAY

ph1:Ø ph2:Ø
Cs1:Ø Cs2:Ø

RESET △ ▼ ENTER

SCREEN 3 — Status of the system

O= Open, Open button = zero Ø (= 1 during the impulse)
C= Close, Close button = zero Ø (=1 during the impulse)
S= Stop, Stop button = zero Ø (=1 during the impulse)
SwO=Opening limit switch = zero Ø (=1 gate completely opened)
SwC= Closing limit switch = zero Ø (=1 gate completely closed)
R= radio control = zero Ø (=1 during the impulse)

DISPLAY

O:Ø C:Ø S:Ø R:Ø
swO Ø swC Ø

RESET ▲ ▽ ENTER

PRESS 3 TIMES

SCREEN 4 — Status of the automation

It is visualized the status of the automation when power is supplied: door in stop (closed) position.

DISPLAY

```
Ø.ØHz    Ø sp
door Closed! ....
```

RESET △ ▽ ENTER

SCREEN 4.1 — Memorizing the gate travel

Once all the electrical connections are completed, with the **gate in closed position** (limit switch Close engaged) make sure the electric motor turns in the correct direction in relation to the limit switches. During this phase, it is advisable to set the torque at a suitable rating to prevent the clutch from slipping while the unit is learning ie storing this setting (a high rating is advisable).

DISPLAY

```
Max course quote
Ø        1ØØØ
```

⚠ **During this operation, the gate moves very slowly at the minimum speed rate as factory pre-set.**

- Press and hold the button ▲ (or give an Open command): the automation operates to Open on deadman control mode.
- Let the gate travel to the limit switch Open, release the button and press **ENTER** to confirm. (To reduce the gate travel on to the Open limit switch, should the gate over travel the limit position, press the button ▼ and then confirm).

***NOTE WELL*:**

- **Should the gate run into an obstacle (eg. stones, etc. ...) during the open or close cycles, the automation stops on expiring of the pre-set time. Any new command will reverse the gate motion to the next limit switch, at the minimum speed as factory pre-set. The subsequent operations are carried on following the settings that are pre-set during the installation.**
- **After a power failure, when the board is powered back with voltage supply, the automation carries on the first operation at the minimum speed as factory pre-set, provided that none of the limit switches is engaged. No memorizing is required. All previous settings are retained.**

RESET △ ▽ ENTER

RESET ▲ ▽ ENTER

SCREEN 5 — Function Automatic-Semiautomatic - Deadman control

DISPLAY

```
mode of use.............
Automatic          Ø
```

Button **ENTER** , to enter the function

Button ▲ ▼ , to select the operating mode

Ø = Automatic, on an opening comand impulse, the gate Opens, stops for a pre-set Dwell time (see screen 7), when it's expired It closes automatically.

1 = Semiautomatic, on an opening command impulse the gate opens and stays open. A closing command impulse is needed to close it.

2 = Deadman control, Open and Close operations are by "hold on switched" control (no relay self-holding is involved). The automation is to be attended and the command unit is required to be held switched to achieve gate operation. Any operation is stopped on releasing the button or key.

Once selected the mode press **ENTER** to confirm

RESET ▲ ▽ ENTER

SCREEN 6 — Radio function

DISPLAY

```
radio:  REVERSES
                Ø
```

Button **ENTER** to enter the function

Button ▲ ▼ to select the operating mode:

0 = Radio reverses on opening
1 = Radio step-by-step with intermediate Stop
2 = Radio doesn't reverse on opening

Once selected the mode press the **ENTER** button to confirm

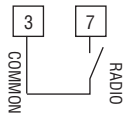

RESET ▲ ▽ ENTER

SCREEN 7 — Pause time on automatic mode

Button **ENTER**, to enter the function

Button ▲ ▼ to select time in seconds:

Once selected the time press **ENTER** button to confirm

DISPLAY

Pause time [S]
10.0

RESET ▲ ▽ ENTER

SCREEN 8 — Photocells 1st pair (terminals 1 and 2)

Button **ENTER**, to enter the function

Button ▲ ▼ , to select the operating mode:

Ø = Photocell doesn't stop gate on opening, it keeps always opening
1 = Photocell stops gate on opening

Once selected the mode press **ENTER** button to confirm

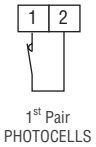

DISPLAY

photo1 mode .....
opening free Ø

RESET ▲ ▽ ENTER

SCREEN 9 — Torque adjustment with low speed: on the autolearning cycle, with slowdown on starting and approaching cycle end

Button **ENTER** to enter the function

Button ▲ ▼ to **decrease torque from 15% to 30%:**

Once selected the setting press **ENTER** button to confirm

DISPLAY

boost LOW
boost 25%

RESET ▲ ▽ ENTER

SCREEN 10 — Torque adjustment with operating speed rating

Button **ENTER** to enter in the function

Button ▲ ▼ to **decrease torque from 50% to 100%:**

Once selected the setting press **ENTER** button to confirm

DISPLAY

boost HIGH
boost 80%

RESET ▲ ▽ ENTER

SCREEN 11 — Photocells 2nd pair (terminals 25 and 26)

Important: if the second Photocells pair or the safety edge are not present in the system it is necessary to bridge terminals 25, 26, 27 and 28.
Button **ENTER** to enter the function

Button ▲ ▼ to select:

- **IMMEDIATE STOP:** the automation stops always and waits for a new command
- **STOP/Invert:** the automation stops on opening, stops and reverses gate travel on Closing. This function is operating in Automatic and Semi-automatic modes (screen5)

Once selected the mode press **ENTER** button to confirm

DISPLAY

photo2 mode .....
Immediate STOP

RESET ▲ ▽ ENTER

SCREEN 12 — Speed setting

Button **ENTER**, to enter the function:

Button ▲ ▼ Select speed setting as required from 30Hz to 45Hz

Once selected the mode press **ENTER** button to confirm

DISPLAY

MAX motor speed
SPEED 40.0 Hz

SCREEN 13 — Pedestrian mode

Button **ENTER**, to enter the function:

Button ▲ ▼ to set opening (if greater than 0 terminal 4 Open is exclusively set to get pedestrian opening). Set value on to 0 to put Pedestrian Opening out of service

Once selected the mode press **ENTER** button to confirm

DISPLAY

```
Pedestrian Open
set>                Ø
```

RESET ▲ ▽ **ENTER**

SCREEN 14 — Visualization display: Voltage, motor absorption, temperature on dissipator plate

It may happen that the control board enters a thermal protection phase and the electric motor is no longer powered until the fan has sufficiently cooled it down to normal functioning condition. Check proper fan operation (it must turn with gate moving and temperature higher than 45°)

DISPLAY

```
350 V        0.0 A
             25 -C
```

RESET ▲ ▽ **ENTER**

SCREEN 15 — Programming code (used only by the manufacturer of the control panel)

Page to insert the password to programme the parameters of Elpro 220 card, used only by the manufacturer (not controllable by user)

```
Insert Password!
                    Ø
```

04-2010

CE

I - Prima dell'installazione da parte di personale tecnico qualificato, si consiglia di prendere visione del Libretto Normative di Sicurezza che la Meccanica Fadini mette a disposizione.

GB - Please note that installation must be carried out by qualified technicians following Meccanica Fadini's Safety Norms Manual.

F - L'installation doit être effectuée par un technicien qualifié suivant le manuel des Normes de Sécurité de Meccanica Fadini.

D - Vor der Installation durch qualifiziertes tecnisches Personal wird empfohlen das Handbuch zu den Sicherheitsvorschriften durchzulesen, das die Meccanica Fadini zur Verfügung stellt.

E - Antes de la instalación por parte del personal técnico cualificado, se aconseja consulter el Libreto con las Normativas de Seguridad que Meccanica Fadini pone a disposición.

NL - Vor der Installation durch qualifiziertes technisches Personal wird empfohlen das Handbuch zu den Sicherheitsvorschriften durchzulesen, das die Meccanica Fadini zur Verfügung stellt.

I

Direttiva **2003/108/CE**
Smaltimento dei materiali elettrici ed elettronici

VIETATO GETTARE NEI RIFIUTI MATERIALI NOCIVI PER L'AMBIENTE

GB

2003/108/CE Directive for waste electrical and electronic equipments

DISPOSE OF PROPERLY ENVIRONMENT-NOXIOUS MATERIALS

meccanica FADINI® s.n.c.

Via Mantova, 177/A - C.P. 126 - 37053 Cerea (Verona) Italy - Tel. +39 0442 330422 r.a. - Fax +39 0442 331054
e-mail: info@fadini.net - www.fadini.net